

HF-Performer III for TL-D lamps

HF-P 3/418 TL-D III 220-240V 50/60Hz IDC

HF-Performer III TLD is a sustainable, slim and high-frequency electronic ballast for TL-D fluorescent lamps. It is ideal for applications where high energy efficiency is required. The HF-Performer III range has a robust design, meets all relevant international safety and performance standards and is energy-efficient (CELMA EEI A2).

Product data

Operating and Electrical	
Input Voltage	220 to 240 V
Line Frequency	50 to 60 Hz
Input frequency	50 to 60 Hz
Inrush current width	0.25 ms
Power Factor (Fraction)	0.99
Inrush current peak (max.)	24 A
Number of products on MCB (16 A type B) (nom.)	28

Wiring	
Connector type input terminals	WAGO 251 universal connector [Suitable for both automatic wiring (ALF and ADS) and manual wiring]
Connector type output terminals	WAGO 251 universal connector [Suitable for both automatic wiring (ALF and ADS) and manual wiring]

Temperature	
T-case lifetime (nom.)	80 °C
T-Case maximum (max.)	80 °C

Mechanical and Housing	
Housing	L 280x40x28
Ingress protection code	IP20 [Finger-protected]
Net Weight (Piece)	0.250 kg

Approval and Application	
Energy efficiency index	A2 BAT
Safety standard	IEC 61347-2-3
Environmental standard	ISO 14001
Approval marks	CE marking ENEC certificate VDE-EMV certificate
CE mark	Yes
Ambient temperature range	-25°C to 60°C

Product Data	
Order product name	HF-P 3/418 TL-D III 220-240V 50/60Hz IDC
Full product name	HF-P 3/418 TL-D III 220-240V 50/60Hz IDC
Full EOC	872790091162600

HF-Performer III for TL-D lamps

Order code	913713031466
Material no. (12 NC)	913713031466
Local order code	HFP3418TLDIII
Numerator – quantity per pack	1
EAN/UPC — Product/Case	8711500999627

Numerator – packs per outer box	10
EAN/UPC - Case	8727900911626

Dimensional drawing

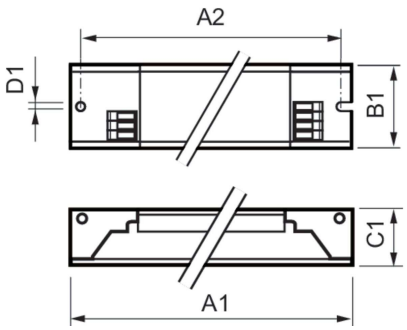

Product	D1	C1	A1	A2	B1
HF-P 3/418 TL-D III 220-240V 50/60Hz IDC	4.2 mm	28.0 mm	280.0 mm	265.0 mm	40.0 mm

© 2026 Signify Holding All rights reserved. Signify does not give any representation or warranty as to the accuracy or completeness of the information included herein and shall not be liable for any action in reliance thereon. The information presented in this document is not intended as any commercial offer and does not form part of any quotation or contract, unless otherwise agreed by Signify. Philips and the Philips Shield Emblem are registered trademarks of Koninklijke Philips N.V.