OUNEVA
OUNEVA GROUP



PRODUCT CATALOG **2023**

Electrical components and enclosure accessories

NEW PRODUCTS



OJL 135, page 37



Tin plated C-sleeves, page 13



Cable joint packages
for 4-conductor systems (Al/Cu),
page 19

OUNEVA
OUNEVA GROUP

You will find Ouneva connectors comprehensively from electrical wholesalers selection! Get familiar with Ouneva pruducts online: www.ounevaproducts.fi

Ouneva Group

Ouneva Group is an international contract manufacturer and R&D partner for a wide range of industries. Constant development, quick and flexible decision-making, and efficient production processes form the foundation of our successful operations. With our strong attitude, we make top quality products and exceed customer expectations.

Our wide technology portfolio covers the manufacturing processes of metal, plastic, electronics and plating in contract manufacturing. Our cutting-edge expertise extends from extremely accurate measuring devices used in the medical industry to high-tech speaker components used in professional studios and to electrical systems used in the mining industry.

Learn more about Ouneva Group: www.ounevagroup.fi

Ouneva Oy

Ouneva Oy is an international manufacturer of electrical connectors with a long history of excellence. We are specialised in connection technology. We provide standard products as well as customer specified solutions.

We offer sheet metal production to the electronics, mechanical engineering and electrical industries. Our production is scalable from individual components to complex assemblies. Our expert DFM design service ensures the best functionality, efficient manufacturing and cost-effectiveness.

Contact information

Ouneva Oy

Teollisuustie 21
82730 Tuupovaara
Finland

Tel. +358 400 179 750

E-mail:
firstname.lastname@ouneva.fi

Managing director

Mikko Nevalainen

Orders

Tuula Tserni
Tel. +358 40 728 6276

Pirjo Lottanen
Tel. +358 40 728 6271

Anu Ruokolainen
Tel. +358 41 731 6296

Sales

Esa Väänänen
Tel. +358 400 276 362

Joaquin Rodriguez
Tel. +358 41 731 8220

Tero Lätti
Tel. +358 41 732 0334

Jukka Hyvärinen
Tel. +358 40 567 2274

Mika Kosunen
Tel. +358 50 569 9954

Table of contents

COPPER CABLE LUGS & CONNECTORS

Cable lugs - PK-series 4
Cable lugs - PKD-series 7
Angle cable lugs 8
JH Splice connectors 10
RJ Parallel sleeves 10
JHR Al/Cu splice connectors 11
Splice connector for unstripped cable 11
C-sleeves 12
Tin plated C-Sleeves 13
Screw cable lug 13

ALUMINIUM CABLE LUGS & CONNECTORS

Aluminium cable lugs OLA 14
Aluminium splice connectors OJA 15
Al/Cu bi-metal cable lugs OSCU 16
Shear bolt cable lugs ROLA 17
Al/Al Shear bolt splice connectors 17
Low Voltage cable joint package 18
Al/Cu Shear bolt splice connectors 19
Al/Cu Low Voltage cable joint package 19

UNIVERSAL CONNECTORS

Universal connector - OL-series 20
Universal connector - OT-series 21
Insulated universal connector - OLE-series 22
Insulated universal connector - OTE-series 23
Insulated universal connector - OTL-series 24
Insulated universal connector - OTL Lite-series 31
Insulated universal connector - OTL PEN 32
Insulated universal connector - OTL FBB 33
Device connectors 34

WIRING TERMINALS

OJL distribution blocks 36
Terminal plate 42
Branching blocks 43
Pole branching connectors 44
Unversal branching connectors 46

GROUNDING EQUIPMENT

Grounding ball studs 47
PEN-connectors 48
Potential equalizer busbars 48
Modular N/PE busbars 49
Grounding busbars 52

CABLE TERMINALS & ACCESSORIES

IECEx/ATEX sealing plugs 53
Cable terminal boxes 54
Flanges for switchgears 56
Socket joints 57
Cover plates 58

BUSBARS & SYSTEM EQUIPMENT

Flexible busbars 59
Busbar system connectors 60
Aluminium busbar connectors 61

OVERHEAD LINE ACCESSORIES (AMKA-PRODUCTS)

Parallel groove clamps and busbar clamp 62
Transformer pole busbars 62
Insulating covers for parellel groove clamps 63
Suspension clamp 63
Dead-end clamp 63

BRANCHING CABINETS & MARKING DEVICES

Branching cabinets 64
Marking devices 65

ENCLOSURE ACCESSORIES

Enclosure latches 67
Latch keys 68
Enclosure hinge 68

QUALITY GUARANTEE

Quality and environmental certificates 69
Samples of product certificates 70

Copper cable lugs

PK-series



General/use: Ouneva copper cable lugs designed for connecting copper cables, coils and busbars. Cable lugs are also compatible with PEX cables. Installation of the cable lugs can be performed with the most basic crimping tools (**see page 9**). PK-series cable lugs are compatible with all kinds of stranded (also compacted) wires.

Materials: The lugs are manufactured of 99,9% pure copper and electrolytically coated with tin.

Certification and applied regulations:
UL 486A-486B

Product documents

STK code	Product code	Product name	Conductor (mm^2)	D (mm)	L (mm)	L1 (mm)	d1 (mm)	d2 (mm)	b (mm)	Weight (g)	Package (pcs)
52 011 01	VA01-0094	PK 0,75-3	0,75	3,3	16	13	1,3	3	6,1	0,5	100
52 011 02	VA01-0095	PK 0,75-4	0,75	4,2	17	13,5	1,3	3	6,5	0,5	100
52 003 13	VA01-0226	PK 0,75-5	0,75	5,4	21	15,5	1,3	3	10	1	100
52 011 05	VA01-0096	PK 1,5-3	1,5	3,3	16	13	1,9	3,4	6,5	1	100
52 011 06	VA01-0097	PK 1,5-4	1,5	4,2	17	13,5	1,9	3,4	6,5	1	100
52 011 07	VA01-0027	PK 1,5-5	1,5	5,4	18	13,5	1,9	3,4	7,5	1	100
52 011 10	VA01-0028	PK 2,5-3	2,5	3,3	16	13	2,6	4,2	6,5	1	100
52 011 11	VA01-0029	PK 2,5-4	2,5	4,2	17	13,5	2,6	4,2	6,5	1	100
52 011 12	VA01-0030	PK 2,5-5	2,5	5,4	18	13,5	2,6	4,2	7,5	1	100
52 011 13	VA01-0031	PK 2,5-6	2,5	6,4	21	15,5	2,6	4,2	8,5	1	100
52 011 20	VA01-0032	PK 6-4	6	4,3	23	17,5	3,6	6	8,5	3	100
52 011 21	VA01-0033	PK 6-5	6	5,5	23	17,5	3,6	6	9,5	3	100
52 011 22	VA01-0034	PK 6-6	6	6,5	25	17,5	3,6	6	9,5	3	100
52 011 23	VA01-0035	PK 6-8	6	8,5	30	23	3,6	6	13	4	100
52 011 25	VA01-0045	PK 10-5	10	5,5	32	22	5	8	11,5	8	100
52 011 26	VA01-0046	PK 10-6	10	6,5	32	22	5	8	11,5	8	100
52 011 27	VA01-0047	PK 10-8	10	8,5	34	22	5	8	13,5	8	100
52 011 28	VA01-0129	PK 10-10	10	10,5	40	27	5	8	14	8	100
52 003 00	VA01-0048	PK 16-5	16	5,5	34	27	6	9	13	10	100
52 011 30	VA01-0049	PK 16-6	16	6,5	34	26	6	9	13	10	100
52 011 31	VA01-0050	PK 16-8	16	8,5	34	26	6	9	13	9	100
52 011 32	VA01-0131	PK 16-10	16	10,5	40	29	6	9	16	10	100
52 011 33	VA01-0132	PK 16-12	16	12,5	43,5	31,5	6	9	18	11	100
52 003 01	VA01-0133	PK 16-14	16	14,5	43,5	31,5	6	9	18	11	100
52 011 35	VA01-0221	PK 25-6	25	6,5	37	30	8	11	16	14	100
52 011 36	VA01-0051	PK 25-8	25	8,5	37	30	8	11	17	13	100
52 011 37	VA01-0115	PK 25-10	25	10,5	40	33	8	11	17	14	100
52 011 38	VA01-0116	PK 25-12	25	12,5	46	34	8	11	20	15	100
52 003 02	VA01-0117	PK 25-14	25	14,5	46	34	8	11	20	15	100
52 011 39	VA01-0118	PK 25-16	25	17	54	39,5	8	11	23	17	100
52 011 40	VA01-0052	PK 35-6	35	6,5	44	35	9	13	18,5	25	100
52 011 41	VA01-0053	PK 35-8	35	8,5	44	35	9	13	18,5	25	100
52 011 42	VA01-0119	PK 35-10	35	10,5	44	35	9	13	18,5	24	100
52 011 43	VA01-0120	PK 35-12	35	12,5	48,5	36,5	9	13	20	26	100
52 017 43	VA01-0121	PK 35-14	35	14,5	48,5	36,5	9	13	20	25	100
52 011 44	VA01-0122	PK 35-16	35	17	56	41,5	9	13	23	28	100
52 003 03	VA01-0054	PK 50-6	50	6,5	49	40	11	14,5	21	29	100
52 011 45	VA01-0055	PK 50-8	50	8,5	49	40	11	14,5	21	28	100
52 011 46	VA01-0123	PK 50-10	50	10,5	49	40	11	14,5	21	27	100
52 011 47	VA01-0124	PK 50-12	50	12,5	55	43	11	14,5	23	29	100
52 017 47	VA01-0125	PK 50-14	50	14,5	55	43	11	14,5	23	29	100
52 011 48	VA01-0126	PK 50-16	50	17	60,5	46	11	14,5	24	33	100

Copper cable lugs

PK-series

STK code	Product code	Product name	Conductor (mm^2)	D (mm)	L (mm)	L1 (mm)	d1 (mm)	d2 (mm)	b (mm)	Weight (g)	Package (pcs)
52 004 49	VA01-0062	PK 70-6	70	6,5	58	49	13	17	24,5	46	50
52 011 50	VA01-0056	PK 70-8	70	8,5	58	49	13	17	24,5	46	50
52 011 51	VA01-0127	PK 70-10	70	10,5	58	47	13	17	24,5	45	50
52 011 52	VA01-0128	PK 70-12	70	12,5	58	46,5	13	17	24,5	44	50
52 017 52	VA01-0017	PK 70-14	70	14,5	58	46,5	13	17	24,5	44	50
52 011 53	VA01-0018	PK 70-16	70	17	65	50,5	13	17	28	48	50
52 012 63	VA01-0072	PK 95-6	95	6,5	69	55	15	20	29	83	50
52 004 46	VA01-0064	PK 95-8	95	8,5	69	55	15	20	29	82	50
52 011 55	VA01-0019	PK 95-10	95	10,5	69	55	15	20	29	80	50
52 011 56	VA01-0020	PK 95-12	95	12,5	69	55	15	20	29	78	50
52 017 56	VA01-0021	PK 95-14	95	14,5	69	55	15	20	29	78	50
52 011 57	VA01-0022	PK 95-16	95	17	69	55	15	20	29	75	50
52 012 61	VA01-0066	PK 120-8	120	8,5	72	58	17	22	32	95	25
52 011 60	VA01-0023	PK 120-10	120	10,5	72	58	17	22	32	93	25
52 011 61	VA01-0024	PK 120-12	120	12,5	72	58	17	22	32	91	25
52 017 61	VA01-0036	PK 120-14	120	14,5	72	58	17	22	32	90	25
52 011 62	VA01-0037	PK 120-16	120	17	72	58	17	22	32	89	25
52 011 64	VA01-0038	PK 150-10	150	11	81	65	19	25	36	147	25
52 011 65	VA01-0039	PK 150-12	150	13	81	65	19	25	36	143	25
52 003 04	VA01-0040	PK 150-14	150	14,5	81	65	19	25	36	143	25
52 011 66	VA01-0041	PK 150-16	150	17	81	65	19	25	36	140	25
52 011 67	VA01-0042	PK 150-20	150	21	81	65	19	25	36	133	25
52 003 05	VA01-0043	PK 185-10	185	11	89	71	21	27	39	173	20
52 011 70	VA01-0044	PK 185-12	185	13	89	71	21	27	39	170	20
52 003 06	VA01-0135	PK 185-14	185	14,5	89	71	21	27	39	168	20
52 011 71	VA01-0144	PK 185-16	185	17	89	71	21	27	39	168	20
52 011 72	VA01-0145	PK 185-20	185	21	89	71	21	27	39	166	20
52 003 07	VA01-0102	PK 240-10	240	11	99	81	24	30	44	219	10
52 011 75	VA01-0103	PK 240-12	240	13	99	81	24	30	44	210	10
52 003 08	VA01-0104	PK 240-14	240	14,5	99	81	24	30	44	212	10
52 011 76	VA01-0105	PK 240-16	240	17	99	81	24	30	44	207	10
52 011 77	VA01-0106	PK 240-20	240	21	99	81	24	30	44	207	10
52 003 09	VA01-0107	PK 300-10	300	11	114	91	26	32	48	273	10
52 003 10	VA01-0108	PK 300-12	300	13	114	91	26	32	48	264	10
52 011 78	VA01-0109	PK 300-14	300	14,5	114	91	26	32	48	276	10
52 011 79	VA01-0110	PK 300-16	300	17	114	91	26	32	48	261	10
52 011 80	VA01-0111	PK 300-20	300	21	114	91	26	32	48	258	10
52 011 81	VA01-0235	PK 300-24	300	25	114	91	26	32	48	253	10
52 011 84	VA01-0112	PK 400-16	400	17	126	103	30	36	54	336	Acc. to order
52 011 85	VA01-0113	PK 400-20	400	21	126	103	30	36	54	326	Acc. to order
52 011 86	VA01-0236	PK 400-24	400	25	126	103	30	36	54	315	Acc. to order

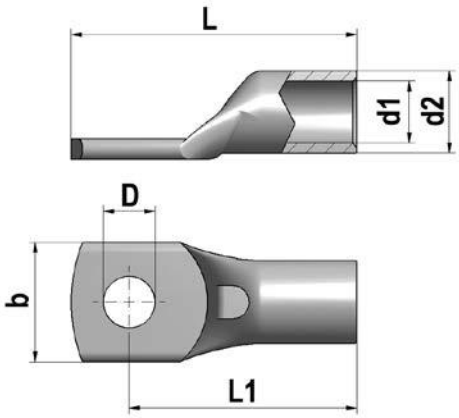

Copper cable lugs

PK-series

CE

Cable lugs with long blade

STK code	Product code	Product name	Conductor (mm^2)	A (mm)	D (mm)	L (mm)	L3 (mm)	d1 (mm)	d2 (mm)	b (mm)	Weight (g)	Package (pcs)
52 004 36	VA01-0326	PKP106	10	16	6,5	34	9	5	8	13,5	8	100
52 004 37	VA01-0134	PKP108	10	21	8,5	39	9	5	8	13,5	9	100
52 004 38	VA01-0222	PKP168	16	20,5	8,5	40	10	6	9	18	11	100
52 004 39	VA01-0327	PKP1610	16	26	11	43,5	10	6	9	18	13	100
52 004 40	VA01-0328	PKP1614	16	33	15	50,5	10	6	9	18	15	100
52 004 41	VA01-0223	PKP258	25	20,5	8,5	40	11	8	11	17	14	100
52 004 42	VA01-0136	PKP2510	25	26	11	45,5	11	8	11	20	16	100
52 004 43	VA01-0137	PKP2514	25	33	15	52,5	11	8	11	20	18	100
52 004 44	VA01-0224	PKP358	35	20,5	8,5	44	14	9	13	18,5	24	100
52 004 76	VA01-0138	PKP3510	35	26	11	48,5	14	9	13	20	27	100
52 004 77	VA01-0139	PKP3514	35	33	15	55,5	14	9	13	20	30	100
52 004 78	VA01-0225	PKP508	50	20,5	8,5	43	19	11	14,5	21	28	100
52 004 79	VA01-0140	PKP5010	50	26	11	55	19	11	14,5	23	31	100
52 004 80	VA01-0141	PKP5014	50	34	15	60,5	19	11	14,5	23	34	100
52 004 81	VA01-0142	PKP7010	70	26	11	58	20	13	17	24,5	45	50
52 004 82	VA01-0143	PKP7014	70	34	15	65	20	13	17	24,5	50	50
52 004 83	VA01-0148	PKP9510	95	33	11	69	23	15	20	29	92	50
52 004 84	VA01-0149	PKP9514	95	33	15	69	23	15	20	29	89	50
52 004 85	VA01-0329	PKP12010	120	33	11	72	25	17	22	32	108	25
52 004 86	VA01-0150	PKP12014	120	33	15	72	25	17	22	32	106	25
52 004 87	VA01-0151	PKP12017	120	44	17	83	25	17	22	32	101	25
52 004 88	VA01-0152	PKP15014	150	38	15	96	35	19	25	36	167	25
52 004 89	VA01-0114	PKP15017	150	44	17	96	35	19	25	36	163	25
52 004 90	VA01-0153	PKP18514	185	41,5	15	94	35	21	27	39	181	20
52 004 91	VA01-0146	PKP18517	185	41,5	17	94	35	21	27	39	178	20
52 004 92	VA01-0147	PKP24017	240	52	17	106	35	24	30	44	224	10

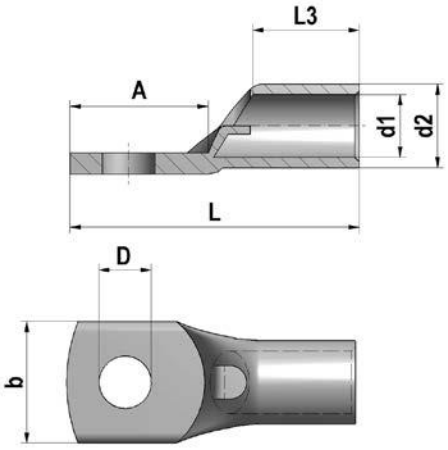

Cable lugs with two fastening holes

STK code	Product code	Product name	Conductor (mm^2)	A (mm)	D (mm)	L (mm)	L1 (mm)	L2 (mm)	L3 (mm)	d1 (mm)	d2 (mm)	b (mm)	Weight (g)	Package (pcs)
52 012 92	VA01-0282	PK10-2x6	10	33	6,5	48,5	16	7	9	5	8	12	9	25
52 011 88	VA01-0285	PK16-2x6	16	33	6,5	49,5	14	7	10	6	9	12	11	25
52 012 93	VA01-0057	PK25-2x8	25	63	8,5	107	30	16	35	8	11	17,5	15	25
52 012 94	VA01-0058	PK35-2x10	35	63	11	107	30	16	35	9	13	18,5	27	25
52 012 95	VA01-0059	PK50-2x10	50	63	11	113	30	16	36	11	14,5	21	31	25
52 012 96	VA01-0060	PK70-2x10	70	72	11	120	38	14	36	13	17	24,5	49	25
52 012 97	VA01-0296	PK95-2x10	95	72	11	120	38	14	36	15	20	29	85	25
52 012 98	VA01-0283	PK120-2x10	120	72	11	120	38	14	30	17	22	32	99	25
52 012 99	VA01-0330	PK150-2x12	150	70	13	120	40	14,5	36	19	25	36	150	10
52 017 00	VA01-0331	PK185-2x12	185	78	13	126	40	20	36	21	27	39	259	10
52 017 01	VA01-0100	PK240-2x14	240	78	15	126	40	20	36	24	30	44	270	10
52 017 02	VA01-0101	PK300-2x14	300	80	15	188	40	18	80	26	32	48	600	10

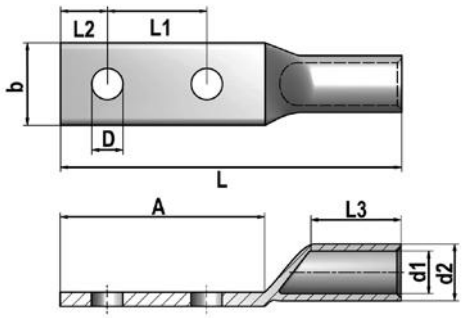

Product documents

Copper cable lugs

PKD-series



General/use: PKD-series cable lugs are compatible with compressed copper wires. Inner and outer dimensions are smaller in size compared to PK-series. Installation of the cable lugs can be performed with the most basic crimping tools (**see page 9**).

Materials: The lugs are manufactured of 99,9 % pure copper and electrolytically coated with tin.

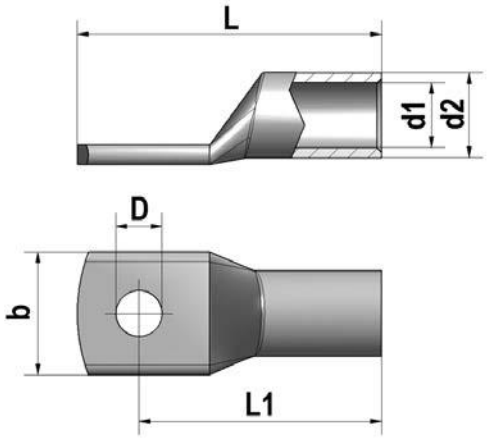

Product documents

STK code	Product code	Product name	Conductor (mm^2)	D (mm)	L (mm)	L1 (mm)	d1 (mm)	d2 (mm)	b (mm)	Weight (g)	Package (pcs)
52 012 02	VA02-0006	PKD 10-5	10	5,5	29	23,0	4,5	7,0	11	5	100
52 012 04	VA02-0007	PKD 10-6	10	6,5	30	23,0	4,5	7,0	11	5	100
52 012 06	VA02-0008	PKD 10-8	10	8,5	32	24,0	4,5	7,0	13	5	100
52 017 25	VA02-0051	PKD 10-10	10	10,5	32	24	4,5	7,0	13	5	100
52 012 10	VA02-0009	PKD 16-6	16	6,5	33,5	26,5	5,5	8,5	13	9	100
52 012 12	VA02-0010	PKD 16-8	16	8,5	35,5	27,5	5,5	8,5	15	9	100
52 003 74	VA02-0011	PKD 16-10	16	10,5	38,5	29,5	5,5	8,5	16	9	100
52 003 32	VA02-0012	PKD 16-12	16	12,5	42,5	31,5	5,5	8,5	18	10	100
52 012 14	VA02-0013	PKD 25-6	25	6,5	37	30,0	7,0	10,0	14	12	100
52 012 16	VA02-0014	PKD 25-8	25	8,5	38	30,0	7,0	10,0	15	12	100
52 012 18	VA02-0015	PKD 25-10	25	10,5	42	32,0	7,0	10,0	16	12	100
52 003 33	VA02-0016	PKD 25-12	25	12,5	46	35,0	7,0	10,0	18	13	100
52 012 20	VA02-0017	PKD 35-6	35	6,5	41	33,0	8,5	12,0	17	19	100
52 012 22	VA02-0018	PKD 35-8	35	8,5	42,5	33,5	8,5	12,0	17	20	100
52 012 24	VA02-0019	PKD 35-10	35	10,5	44	34,0	8,5	12,0	17	19	100
52 003 34	VA02-0020	PKD 35-12	35	12,5	47,5	36,5	8,5	12,0	19	20	100
52 012 26	VA02-0021	PKD 50-8	50	8,5	47,5	38,5	10,0	14,0	21	29	100
52 012 28	VA02-0022	PKD 50-10	50	10,5	49	39,0	10,0	14,0	21	29	100
52 012 30	VA02-0023	PKD 50-12	50	12,5	52	42,5	10,0	14,0	23	30	100
52 012 32	VA02-0024	PKD 70-8	70	8,5	52	43,0	12,0	16,5	24	44	50
52 012 34	VA02-0025	PKD 70-10	70	10,5	53	43,0	12,0	16,5	24	44	50
52 012 36	VA02-0026	PKD 70-12	70	12,5	56	44,0	12,0	16,5	24	45	50
52 012 38	VA02-0005	PKD 95-8	95	8,5	60	48,0	13,5	18,0	27	59	50
52 012 40	VA02-0001	PKD 95-10	95	10,5	60	48,0	13,5	18,0	27	57	50
52 012 42	VA02-0027	PKD 95-12	95	12,5	60	48,0	13,5	18,0	27	55	50
52 004 53	VA02-0003	PKD 120-10	120	10,5	69	55	15	19,5	28	65	25
52 004 54	VA02-0028	PKD 120-12	120	12,5	69	55	15	19,5	28	62	25
52 004 56	VA02-0029	PKD 120-14	120	14	69	55	15	19,5	28	60	25
52 004 57	VA02-0030	PKD 150-10	150	10,5	76	60	16,5	21	32	103	25
52 004 58	VA02-0031	PKD 150-12	150	12,5	76	60	16,5	21	32	100	25
52 004 59	VA02-0032	PKD 150-14	150	14	76	60	16,5	21	32	97	25

Copper cable lugs

PKK-series angle cable lugs





General/use: Angle cable lugs are designed for connecting copper cables, coils and busbars. Lugs are compatible with all kinds of stranded (also compressed) wires. PKK-series cable lugs are available with both 90° and 45° angle. When installing PKK-series cable lugs, use installation instructions provided for PK-series copper lugs (**see page 9**).

Materials: The lugs are manufactured of 99,9% pure copper and electrolytically coated with tin.

90° angle cable lugs

STK code	Product code	Product name	Conductor (mm²)	D (mm)	d1 (mm)	d2 (mm)	b (mm)	Weight (g)	Package (pcs)
52 003 19	VA01-0156	PKK 10-6-90	10	6,5	5	8	11,5	8	50
52 003 20	VA01-0157	PKK 10-8-90	10	8,5	5	8	13,5	8	50
52 003 21	VA01-0159	PKK 10-10-90	10	10,5	5	8	14	8	50
52 003 24	VA01-0161	PKK 16-6-90	16	6,5	6	9	13	10	50
52 003 25	VA01-0163	PKK 16-8-90	16	8,5	6	9	13	9	50
52 003 26	VA01-0164	PKK 16-10-90	16	10,5	6	9	16	10	50
52 003 29	VA01-0261	PKK 25-6-90	25	6,5	8	11	16	14	50
52 003 76	VA01-0168	PKK 25-8-90	25	8,5	8	11	17	13	50
52 003 77	VA01-0169	PKK 25-10-90	25	10,5	8	11	17	14	50
52 003 81	VA01-0262	PKK 35-6-90	35	6,5	9	13	18,5	25	50
52 003 82	VA01-0266	PKK 35-8-90	35	8,5	9	13	18,5	25	50
52 003 83	VA01-0265	PKK 35-10-90	35	10,5	9	13	18,5	24	50
52 003 88	VA01-0268	PKK 50-8-90	50	8,5	11	14,5	21	28	50
52 003 89	VA01-0269	PKK 50-10-90	50	10,5	11	14,5	21	27	50
52 003 90	VA01-0180	PKK 50-12-90	50	12,5	11	14,5	23	29	50
52 003 93	VA01-0183	PKK 70-8-90	70	8,5	13	17	24,5	46	25
52 003 94	VA01-0184	PKK 70-10-90	70	10,5	13	17	24,5	45	25
52 003 95	VA01-0187	PKK 70-12-90	70	12,5	13	17	24,5	44	25
52 003 98	VA01-0274	PKK 95-10-90	95	10,5	15	20	29	80	25
52 003 99	VA01-0239	PKK 95-12-90	95	12,5	15	20	29	78	25
52 003 43	VA01-0240	PKK 95-16-90	95	17	15	20	29	75	25
52 003 44	VA01-0192	PKK 120-10-90	120	10,5	17	22	32	93	15
52 003 45	VA01-0275	PKK 120-12-90	120	12,5	17	22	32	91	15
52 003 47	VA01-0191	PKK 120-16-90	120	17	17	22	32	89	15
52 003 48	VA01-0243	PKK 150-10-90	150	11	19	25	36	147	10
52 003 49	VA01-0246	PKK 150-12-90	150	13	19	25	36	143	10
52 003 52	VA01-0249	PKK 150-16-90	150	17	19	25	36	133	10
52 003 53	VA01-0258	PKK 185-10-90	185	11	21	27	39	173	10
52 003 54	VA01-0260	PKK 185-12-90	185	13	21	27	39	170	10
52 003 67	VA01-0255	PKK 185-16-90	185	17	21	27	39	168	10
52 003 70	VA01-0073	PKK 240-12-90	240	13	24	30	44	210	5
52 003 72	VA01-0220	PKK 240-16-90	240	17	24	30	44	207	5
52 003 73	VA01-0279	PKK 240-20-90	240	21	24	30	44	207	5

45° angle cable lugs

STK code	Product code	Product name	Conductor (mm²)	D (mm)	d1 (mm)	d2 (mm)	b (mm)	Weight (g)	Package (pcs)
52 003 59	VA01-0081	PKK 10-6-45	10	6,5	5	8	11,5	8	50
52 003 61	VA01-0158	PKK 10-8-45	10	8,5	5	8	13,5	8	50
52 003 62	VA01-0084	PKK 10-10-45	10	10,5	5	8	14	8	50
52 004 05	VA01-0083	PKK 16-6-45	16	6,5	6	9	13	10	50
52 004 06	VA01-0162	PKK 16-8-45	16	8,5	6	9	13	9	50
52 004 07	VA01-0251	PKK 16-10-45	16	10,5	6	9	16	10	50
52 004 09	VA01-0174	PKK 25-6-45	25	6,5	8	11	16	14	50
52 004 10	VA01-0167	PKK 25-8-45	25	8,5	8	11	17	13	50
52 004 11	VA01-0280	PKK 25-10-45	25	10,5	8	11	17	14	50
52 004 13	VA01-0179	PKK 35-6-45	35	6,5	9	13	18,5	25	50
52 004 14	VA01-0263	PKK 35-8-45	35	8,5	9	13	18,5	25	50
52 004 15	VA01-0264	PKK 35-10-45	35	10,5	9	13	18,5	24	50
52 004 17	VA01-0267	PKK 50-8-45	50	8,5	11	14,5	21	28	50
52 004 18	VA01-0271	PKK 50-10-45	50	10,5	11	14,5	21	27	50
52 004 19	VA01-0181	PKK 50-12-45	50	12,5	11	14,5	23	29	50
52 004 20	VA01-0273	PKK 70-8-45	70	8,5	13	17	24,5	46	25
52 004 21	VA01-0185	PKK 70-10-45	70	10,5	13	17	24,5	45	25
52 004 22	VA01-0186	PKK 70-12-45	70	12,5	13	17	24,5	44	25
52 004 24	VA01-0189	PKK 95-10-45	95	10,5	15	20	29	80	25
52 004 25	VA01-0190	PKK 95-12-45	95	12,5	15	20	29	78	25
52 011 95	VA01-0319	PKK 95-16-45	95	17	15	20	29	75	25
52 004 27	VA01-0281	PKK 120-10-45	120	10,5	17	22	32	93	15
52 004 28	VA01-0276	PKK 120-12-45	120	12,5	17	22	32	91	15
52 011 96	VA01-0320	PKK 120-16-45	120	17	17	22	32	89	15
52 004 30	VA01-0241	PKK 150-10-45	150	11	19	25	36	147	10
52 004 31	VA01-0245	PKK 150-12-45	150	13	19	25	36	143	10
52 011 97	VA01-0321	PKK 150-16-45	150	17	19	25	36	140	10
52 011 98	VA01-0322	PKK 185-10-45	185	11	21	27	39	173	10
52 011 99	VA01-0323	PKK 185-12-45	185	13	21	27	39	170	10
52 012 00	VA01-0324	PKK 185-16-45	185	17	21	27	39	168	10
52 004 33	VA01-0208	PKK 240-12-45	240	13	24	30	44	210	5
52 004 35	VA01-0219	PKK 240-16-45	240	17	24	30	44	207	5
52 012 01	VA01-0325	PKK 240-20-45	240	21	24	30	44	207	5

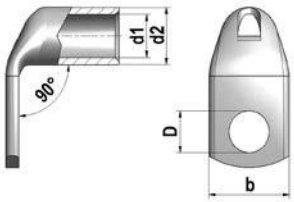

90° angle cable lugs

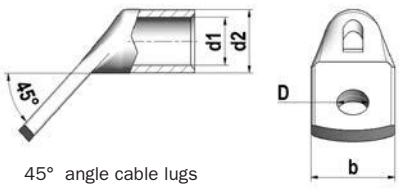

45° angle cable lugs

Product documents

Copper cable lugs

Crimping tools for copper cable lugs

Crimping tools for PK-series cable lugs

PK-series	Stripping length of cable	Elpress hexagonal die		Elpress (PVL 350)		Elpress hexagonal die		Klauke (K 50)		Klauke (EKM 60 ID-L)	Novopress V-press		Milwaukee (M18 ONEHCCT60)	
Type-size	(mm)	Die type	No. of crimps	Die type	No. of crimps	Die type	No. of crimps	Die type	No. of crimps	No. of crimps	Die type	No. of crimps	Die type	No. of crimps
PK-0,75	7	-	-	-	-	-	-	R501	1	-	-	-	-	-
PK-1,5	7	-	-	-	-	-	-	R501	1	-	-	-	-	-
PK-2,5	7	-	-	-	-	-	-	R501	1	-	-	-	-	-
PK-(4)/6	7,5	-	-	-	-	-	-	R502	1	-	-	-	-	-
PK-4/(6)	7,5	-	-	-	-	-	-	R502	1	-	-	-	-	-
PK-10	11	B8	1	MB8	1	13B8	1	R502	1	1	HPM400	1	R22 0U 10	1
PK-16	12	B9	1	MB9	1	13B9	1	-	-	1	HPM400	1	R22 0U 16	1
PK-25	13	B11	1	MB11	2	13B11	1	-	-	1	HPM400	1	R22 0U 25	2
PK-35	16	B13	1	MB13	2	13B13	1	-	-	1	HPM400	1	R22 0U 35	2
PK-50	21	B14,5	1	MB14,5	2	13B14,5	1	-	-	1	HPM400	1	R22 0U 50	2
PK-70	22	B17	1	MB17	3	13B17	1	-	-	1	HPM400	1	R22 0U 70	3
PK-95	26	B20	1	-	-	13B20	1	-	-	1	HPM400	1	R22 0U 95	3
PK-120	28	B22	1	-	-	13B22	2	-	-	1	HPM400	2	R22 0U 120	4
PK-150	31	B25	1	-	-	13B25	2	-	-	1	HPM400	2	R22 0U 150	4
PK-185	33	B27	1	-	-	13B27	2	-	-	1	HPM400	2	R22 0U 185	4
PK-240	37	B30	1	-	-	13B30	2	-	-	1	HPM400	2	R22 0U 240	4
PK-300	45	B32	1	-	-	13B32	2	-	-	-	HPM400	2	R22 0U 300	4
PK-400	48	B36	2	-	-	-	-	-	-	-	HPM400	2	-	-

Crimping tools for PKD-series cable lugs

PKD-series	Stripping length of cable	Elpress hexagonal die		Klauke (EK 22)		Klauke (K 50)		Klauke (EKM 60 ID-L)	Novopress V-press		Milwaukee (M18 HCCT)	
Type-size	(mm)	Die type	No. of crimps	Die type	No. of crimps	Die type	No. of crimps	No. of crimps	Die type	No. of crimps	Die type	No. of crimps
PKD-10	11	B7	1	R 22 / 10 mm²	1	R502	1	1	HPM400	1	-	-
PKD-16	13	B8,5	1	R 22 / 16 mm²	1	-	-	1	HPM400	1	R22 Cu 16	1
PKD-25	15	B10	1	R 22 / 25 mm²	2	-	-	1	HPM400	1	R22 Cu 25	2
PKD-35	17	B12	1	R 22 / 35 mm²	2	-	-	1	HPM400	1	R22 Cu 35	2
PKD-50	20	B14	1	R 22 / 50 mm²	2	-	-	1	HPM400	1	R22 Cu 50	2
PKD-70	22	B16	1	R 22 / 70 mm²	3	-	-	1	HPM400	1	R22 Cu 70	3
PKD-95	23	B18	1	R 22 / 95 mm²	3	-	-	1	HPM400	1	R22 Cu 95	3
PKD-120	27	B19	1	R 22 / 120 mm²	4	-	-	1	HPM400	2	R22 Cu 120	4
PKD-150	32	B22 / 13B22	1* / 2**	R 22 / 150 mm²	4	-	-	1	HPM400	2	R22 Cu 150	4

JH Splice sleeves & RJ parallel sleeves

General/use: Splices and parallel sleeves are designed for extending and branching of copper cables and coils. Ouneva's sleeves are also compatible with PEX cables. Installation of the sleeves can be performed by the most basic crimping tools (**see page 11**).

Materials: The connectors are manufactured of 99,9 % pure copper and are electrolytically coated with tin.



JH Splice connectors

STK code	Product code	Product name	Conductor (mm²)	L (mm)	d1 (mm)	d2 (mm)	Weight (g)	Package (pcs)
52 066 00	VA03-0033	JH 0,75	0,75	14	1,4	3	1	100
52 066 05	VA03-0034	JH 1,5	1,5	14	1,6	3,4	1	100
52 066 10	VA03-0015	JH 2,0	2,5	15	2,3	3,9	1	100
52 017 40	VA03-0096	JH 2,5	2,5	15	2,6	4,2	1	100
52 066 20	VA03-0036	JH 6	6	19	3,6	6	3	100
52 066 25	VA03-0037	JH 10	10	21	5	8	6	100
52 066 30	VA03-0038	JH 16	16	29	6	9	9	100
52 066 35	VA03-0035	JH 25	25	35	8	11	14	100
52 066 40	VA03-0039	JH 35	35	35	9	13	22	100
52 066 45	VA03-0040	JH 50	50	40	11	14,5	25	50
52 066 50	VA03-0041	JH 70	70	40	13	17	33	50
52 066 55	VA03-0042	JH 95	95	55	15	20	67	50
52 066 60	VA03-0013	JH 120	120	55	17	22	74	50
52 066 65	VA03-0043	JH 150	150	55	19	25	99	25
52 066 70	VA03-0012	JH 185	185	70	21	27	138	25
52 066 75	VA03-0053	JH 240	240	70	22	29	156	25
52 066 80	VA03-0023	JH 300	300	75	24,5	31,5	180	10
52 066 85	VA03-0024	JH 400	400	100	30	38	210	10

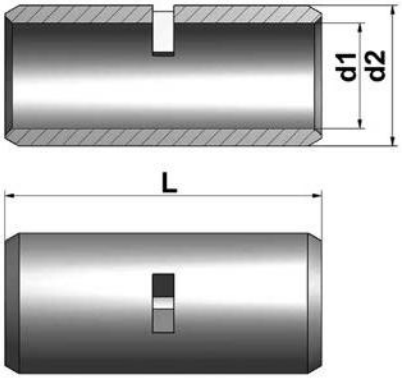

Product documents

RJ Parallel sleeves

STK code	Product code	Product name	Conductor (mm²)	L (mm)	d1 (mm)	d2 (mm)	Weight (g)	Package (pcs)
52012 80	VA03-0017	RJ 1,5	1,5	8	1,6	3,4	0,4	100
52 012 79	VA03-0016	RJ 2,0	2,5	8	2,3	3,9	0,6	100
52 017 39	VA03-0097	RJ 2,5	2,5	7	2,6	4,2	0,6	100
52 004 72	VA03-0026	RJ 6	6	10	3,6	6	2	100
52 004 73	VA03-0019	RJ 10	10	10	5	8	3	100
52 004 74	VA03-0020	RJ 16	16	14	6	9	4	100
52 004 97	VA03-0025	RJ 25	25	15	8	11	6	100
52 004 98	VA03-0021	RJ 35	35	19	9	13	10	100
52 004 99	VA03-0022	RJ 50	50	20	11	14,5	11	50
52 011 00	VA03-0032	RJ 70	70	20	13	17	15	50
52 011 03	VA03-0014	RJ 95	95	25	15	20	25	50
52 011 04	VA03-0027	RJ 120	120	27	17	22	30	50
52 011 09	VA03-0028	RJ 150	150	30	19	25	48	25
52 011 14	VA03-0029	RJ 185	185	35	21	27	56	25
52 011 18	VA03-0030	RJ 240	240	35	24	30	68	25
52 011 19	VA03-0031	RJ 300	300	40	26	32	83	10
52 012 19	VA03-0054	RJ 400	400	50	30	36	106	10

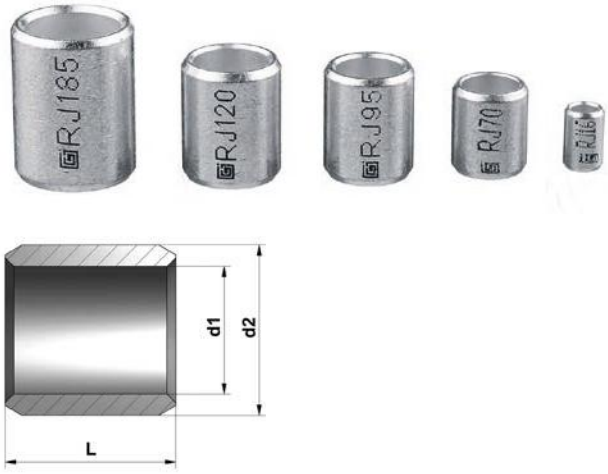

JHR Al/Cu splice connector

General/use: JHR-series Al/Cu splice connectors are designed for extending of aluminium and copper cables and coils. Installation of the splices can be performed by the most basic crimping tools.

Materials: The connectors are manufactured of 99,9 % pure copper and are electrolytically coated with tin. The raster mesh inside the tube is made of brass.



STK code	Product code	Product name	Conductor (mm²)	L (mm)	d1 (mm)	d2 (mm)	Weight (g)	Package (pcs)
52 004 61	VA03-0057	JHR16	16	29	5,2	9	10	100
52 004 62	VA03-0044	JHR 25	25	40	7,2	11	16	100
52 004 63	VA03-0045	JHR 35	35	40	8,2	13	24	100
52 004 64	VA03-0046	JHR 50	50	55	10,2	14,5	27	50
52 004 66	VA03-0009	JHR 70	70	60	12,2	17	56	50
52 004 67	VA03-0047	JHR 95	95	60	14,2	20	79	50
52 004 68	VA03-0048	JHR 120	120	60	16,2	22	89	50
52 004 69	VA03-0011	JHR 150	150	75	18,2	25	103	25
52 004 71	VA03-0055	JHR 185	185	75	20,2	27	142	25
52 012 21	VA03-0080	JHR 240	240	75	23,2	30	168	25
52 012 23	VA03-0081	JHR 300	300	75	25,2	32	195	10
52 012 25	VA03-0082	JHR 400	400	100	29,2	36	222	10

Product documents

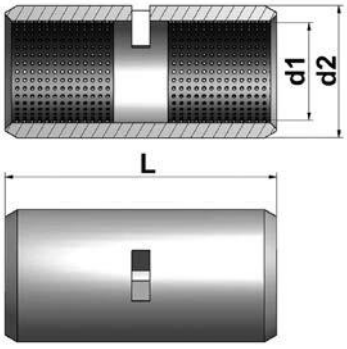

Crimping tools for splices and parallel sleeves

JH/RJ/ JHR	Stripping length of cable	Elpress hexagonal die		Klauke (K 50)		Klauke (EKM 60 ID-L)	Novopress V-press		Milwaukee (M18 ONEHCCT60)		Elpress hexagonal die	
Size (mm²)	(mm)	Die type	No. of crimps	Die type	No. of crimps	No. of crimps	Die type	No. of crimps	Die type	No. of crimps	Die type	No. of crimps
0,75	6*	-	-	R501	2* / 1**	-	-	-	-	-	-	-
1,5	7*	-	-	R501	2* / 1**	-	-	-	-	-	-	-
2,5	7*	-	-	R501	2* / 1**	-	-	-	-	-	-	-
(4)/6	9* / 9**	-	-	R502	2* / 1**	-	-	-	-	-	-	-
4/(6)	9* / 9**	-	-	R502	2* / 1**	-	-	-	-	-	-	-
10	10* / 10**	B8	2* / 1**	R502	2* / 1**	2* / 1**	HPM400	2* / 1**	R22 0U 10	2*/1**	13B8	2* / 1**
16	14* / 14**	B9	2* / 1**	-	-	2* / 1**	HPM400	2* / 1**	R22 0U 16	4*/2**	13B9	2* / 1**
25	16* / 15**	B11	2* / 1**	-	-	2* / 1**	HPM400	2* / 1**	R22 0U 25	4*/2**	13B11	2* / 1**
35	16* / 16**	B13	2* / 1**	-	-	2* / 1**	HPM400	2* / 1**	R22 0U 35	4*/2**	13B13	2* / 1**
50	19* / 18**	B14,5	2* / 1**	-	-	2* / 1**	HPM400	2* / 1**	R22 0U 50	4*/3**	13B14,5	2* / 1**
70	19* / 18**	B17	2* / 1**	-	-	2* / 1**	HPM400	2* / 1**	R22 0U 70	4*/3**	13B17	2* / 1**
95	21* / 20**	B20	2* / 1**	-	-	2* / 1**	HPM400	2* / 1**	R22 0U 95	6*/3**	13B20	2* / 1**
120	21* / 22**	B22	2* / 1**	-	-	2* / 1**	HPM400	4* / 2**	R22 0U 120	6*/3**	13B22	4* / 2**
150	26* / 26**	B25	2* / 1**	-	-	2* / 1**	HPM400	4* / 2**	R22 0U 150	6*/3**	13B25	4* / 2**
185	34* / 30**	B27	2* / 1**	-	-	2* / 1**	HPM400	4* / 2**	R22 0U 185	8*/4**	13B27	4* / 2**
240	34* / 30**	B30	2* / 1**	-	-	2* / 1**	HPM400	4* / 2**	R22 0U 240	8*/4**	13B30	4* / 2**
300	36* / 35**	B32	2* / 1**	-	-	-	HPM400	4* / 2**	R22 0U 300	8*/4**	13B32	4* / 2**
400	36* / 40**	B36	2* / 1**	-	-	-	HPM400	4* / 2**	-	-	-	-

*JH/JHR **RJ

Splice connector for unstripped cable

General/use: Shear bolt splice connector can be used for unstripped cables in ingress protection demanding conditions. Assembly includes 400 mm fine stranded conductor. IP43 protection class.

Materials: PC/Tin plated aluminium

STK code	Product code	Conductor (mm²)	Wire type	Weight (g)	Package (pcs)
52 017 27	VA03-0109	Al 25-50/Cu 16	Black Unilev	120	9
52 017 28	VA03-0112	Al 25-50/Cu 16	Yellow/Green MKEM	120	9
52 017 29	VA03-0113	Al 25-50/Cu 16	Black MKEM	120	9
52 017 30	VA03-0114	Al 25-50/Cu 16	Blue MKEM	120	9
52 017 31	VA03-0115	Al 25-50/Cu 16	Grey MKEM	120	9
52 017 32	VA03-0116	Al 25-50/Cu 16	Brown MKEM	120	9

Product documents



C-sleeve

General/use: C-sleeves are designed for connecting, branching and extending of copper lines. The C-sleeves haves marking of manufacturer, type of sleeve and the sizes of compatible wires.

Materials: Sleeves are manufactured of 99,9 % pure copper.



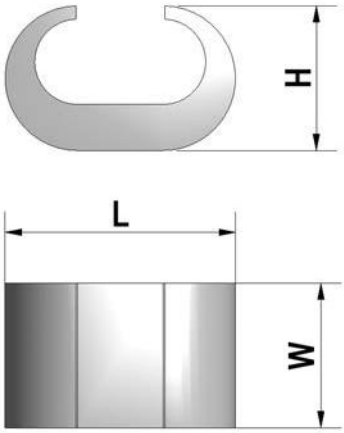

Product documents

STK code	Product code	Product name	Conductor (mm²)	L (mm)	H (mm)	W (mm)	Crimping dies (Elpress)	Weight (g)	Package (pcs)
50 403 04	VA05-0010	C4	6-10/6-10	13	8	12	BC4	5	100
50 403 00	VA05-0011	C5	10-16/10-16	16	10	15	BC5	10	100
50 403 05	VA05-0001	C6-3	16-25/6	19	12	16	BC6	19	100
50 403 06	VA05-0002	C6	16-25/16-25	22	11,8	16	BC6	18	100
50 403 01	VA05-0012	C8-6	25-35/16-25	28	18	22,7	BC8-9	60	50
50 403 08	VA05-0003	C8	25-35/25-35	28	18	23	BC8-9	58	50
50 403 10	VA05-0008	C9-6	35-50/16-25	28	18	23	BC8-9	58	50
50 403 02	VA05-0013	C9-8	35-50/25-35	28	18	23	BC8-9	56	50
50 403 09	VA05-0004	C9	35-50/35-50	28	18	23	BC8-9	51	50
50 403 03	VA05-0014	C11-8	50-70/25-35	31	19	23	BC11	63	50
50 403 07	VA05-0015	C11-9	50-70/35-50	31	19	23	BC11	60	50
50 403 11	VA05-0005	C11	50-70/50-70	31	19	24	BC11	59	50
50 403 12	VA05-0016	C13-8	70-95/25-35	35	22	25	BC13*	89	50
50 403 14	VA05-0017	C13-9	70-95/35-50	35	22	25	BC13*	87	50
50 403 16	VA05-0018	C13-11	70-95/50-70	35	22	25	BC13*	82	50
50 403 13	VA05-0007	C13	70-95/70-95	35	22	25	BC13*	74	50
50 403 17	VA05-0019	C15-8	95-120/25-35	41	26	30	BC15*	152	25
50 403 18	VA05-0020	C15-9	95-120/35-50	41	26	30	BC15*	149	25
50 403 19	VA05-0021	C15-11	95-120/50-70	41	26	30	BC15*	144	25
50 403 20	VA05-0022	C15-13	95-120/70-95	41	26	30	BC15*	136	25
50 403 15	VA05-0006	C15	95-120/95-120	41	26	30	BC15*	123	25
50 403 22	VA05-0024	C16-9	120-150/35-50	53	30	35	25BC16*	264	10
50 403 21	VA05-0023	C16	120-150/120-150	53	30	35	25BC16*	232	10

*Not suitable with Elpress 1300 -series

Tin plated C-sleeves

NEW



Tin plated C-sleeves for challenging environments

STK code	Product code	Product name	Conductor (mm²)	L (mm)	H (mm)	W (mm)	Crimping dies (Elpress)	Weight (g)	Package (pcs)
50 403 33	VA05-0029	C4 Tin	6-10/6-10	13	8	12	BC4	5	100
50 403 32	VA05-0030	C5 Tin	10-16/10-16	16	10	15	BC5	10	100
50 403 24	VA05-0031	C6-3 Tin	16-25/6	19	12	16	BC6	19	100
50 403 26	VA05-0026	C6 Tin	16-25/16-25	22	11,8	16	BC6	18	100
50 403 34	VA05-0032	C8-6 Tin	25-35/16-25	28	18	22,7	BC8-9	60	50
50 403 28	VA05-0033	C8 Tin	25-35/25-35	28	18	23	BC8-9	58	50
50 403 36	VA05-0034	C9-6 Tin	35-50/16-25	28	18	23	BC8-9	58	50
50 403 38	VA05-0035	C9-8 Tin	35-50/25-35	28	18	23	BC8-9	56	50
50 403 29	VA05-0036	C9 Tin	35-50/35-50	28	18	23	BC8-9	51	50
50 403 42	VA05-0037	C11-8 Tin	50-70/25-35	31	19	23	BC11	63	50
50 403 43	VA05-0038	C11-9 Tin	50-70/35-50	31	19	23	BC11	60	50
50 403 30	VA05-0027	C11 Tin	50-70/50-70	31	19	24	BC11	59	50
50 403 44	VA05-0039	C13-8 Tin	70-95/25-35	35	22	25	BC13*	89	50
50 403 46	VA05-0040	C13-9 Tin	70-95/35-50	35	22	25	BC13*	87	50
50 403 48	VA05-0041	C13-11 Tin	70-95/50-70	35	22	25	BC13*	82	50
50 403 49	VA05-0046	C13 Tin	70-95/70-95	35	22	25	BC13*	74	50
50 403 51	VA05-0042	C15-8 Tin	95-120/25-35	41	26	30	BC15*	152	25
50 403 53	VA05-0043	C15-9 Tin	95-120/35-50	41	26	30	BC15*	149	25
50 403 55	VA05-0044	C15-11 Tin	95-120/50-70	41	26	30	BC15*	144	25
50 403 57	VA05-0045	C15-13 Tin	95-120/70-95	41	26	30	BC15*	136	25
50 403 31	VA05-0028	C15 Tin	95-120/95-120	41	26	30	BC15*	123	25
50 403 59	VA05-0047	C16 Tin	120-150/35-50	53	30	35	25BC16*	264	10
50 403 58	VA05-0048	C16-9 Tin	120-150/120-150	53	30	35	25BC16*	232	10

*Not suitable with Elpress 1300 -series



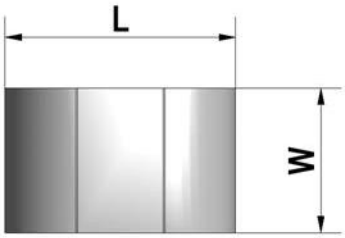

Product documents

Screw cable lug

General/use: Screw cable lug is designed for connecting copper wires. It can be installed without any special tools. Tightening screws and the bracket are made of steel and plated with zinc.

Materials: The lug is made of 99,9 % pure copper and electrolytically coated with tin.

Product documents

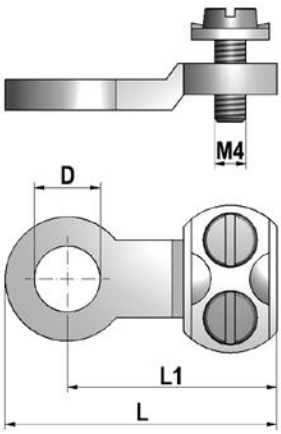



STK code	Product code	Product name	Conductor (mm²)	L (mm)	L1 (mm)	D (mm)	Tightening screw	Weight (g)	Package (pcs)
52 003 30	VA06-0001	RKK 1,5-16	1,5-16	26	20	8,5	M4	19	100

Aluminium cable lug OLA



General /use: OLA aluminium cable lugs are designed to be used when connecting aluminium cables. Connectors are delivered with a conical washer and a flat pressure washer. OLA connectors can also be connected to tin-plated, silver-plated and unplated copper busbars if joint grease is used. Connectors are also compatible with PEX cables. Installation of OLA connectors can be made with tested and approved crimping tools.

Materials: Cable lugs are manufactured of aluminium.

STK code	Product code	Product name	Conductor (mm²)	D (mm)	L (mm)	L1 (mm)	d1 (mm)	d2 (mm)	W (mm)	S (mm)	Weight (g)	Package (pcs/bag or box)
52 023 30	VB01-0073	OLA 16-8	16	8,5	53	41,5	5,4	11	18	3,5	5	3 / 30
52 012 03	VB01-0066	OLA 16-12	16	12,5	66	49,5	5,4	11	18	3,5	7	3 / 30
52 023 35	VB01-0002	OLA 25-8	25	8,5	53,5	42,5	6,8	13	20	4	8	3 / 30
52 004 51	VB01-0026	OLA 25-12	25	12,5	65	49	6,8	13	20	4,5	9	3 / 30
52 023 40	VB01-0003	OLA 35-8	35	8,5	54,5	43,5	8,2	15	20	5	12	3 / 30
52 012 05	VB01-0024	OLA 35-12	35	12,5	66	49	8,2	15	20	5,5	14	3 / 30
52 023 45	VB01-0058	OLA 50-10	50	10,5	61,5	48	9,6	17	25	6	17	3 / 30
52 012 07	VB01-0029	OLA 50-12	50	12,5	67	50,5	9,6	17	25	6	20	3 / 30
52 023 50	VB01-0059	OLA 70-10	70	10,5	74	60	11,5	21	25	9	40	3 / 30
52 004 52	VB01-0067	OLA 70-12	70	12,5	80	63	11,5	21	32	7	45	3 / 30
52 023 55	VB01-0060	OLA 95-12	95	12,5	88	70	13,5	23	32	9	58	3 / 30
52 012 09	VB01-0036	OLA 120-10	120	10,5	87	69	15,5	26	32	10	72	3 / 30
52 023 60	VB01-0061	OLA 120-12	120	12,5	87	70	15,5	26	32	10	71	3 / 30
52 023 65	VB01-0062	OLA 150-12	150	12,5	94	76	16,5	26	32	9	71	3 / 30
52 012 11	VB01-0070	OLA 150-16	150	16,5	94	77	16,5	26	40	8	79	3 / 30
52 012 78	VB01-0037	OLA 185-10	185	10,5	98	80	18,7	29	34	10	92	3 / 90
52 023 70	VB01-0063	OLA 185-12	185	12,5	98	80	18,7	29	34	10	91	3 / 30
52 012 13	VB01-0031	OLA 185-16	185	16,5	111,5	89,5	18,7	29	41	10	106	3 / 30
52 023 75	VB01-0064	OLA 240-12	240	12,5	111,5	94	21	31	40	10	112	3 / 30
52 012 15	VB01-0038	OLA 240-16	240	17	125	102,5	21	31	44	10	129	3 / 30
52 023 80	VB01-0065	OLA 300-12	300	12,5	98	80	22,5	33	40	10	104	3 / 30
52 012 17	VB01-0074	OLA 300-16	300	17	112	88,5	22,5	33	46	10	123	3 / 30
52 004 01	VB01-0001	OLA 800-2x14	800	2 14	261	201/241	36	60	40	20	964	1 / 15

Crimping tools for OLA cable lugs

OLA	Stripping length of cable	Elpress hexagonal die		Burndy round die		Novopress HP 300		Novopress HP 400		Thomas & Betts TBM-8		Klauke (EKM 60 ID-L)
OLA - size (mm²)	(mm)	Die type	No. of crimps	Die type	No. of crimps	Die type	No. of crimps	Die type	No. of crimps	Die type	No. of crimps	No. of crimps
OLA 16	30	B11	2	U237	2	-	-	-	-	13461 Brown	2	1
OLA 25	30	B13	2	U250	4	-	-	-	-	13462 Green	2	1
OLA 35	35	B14,5	2	U250	4	35-50	3	16-400	3	13462 Black	3	1
OLA 50	40	B16	2	U252	4	35-50	3	16-400	3	13464 Tan	3	1
OLA 70	45	B20	2	U166	3	70-240	3	16-400	3	13464 Ruby	3	1
OLA 95	50	B22	2	U247	2	70-240	3	16-400	3	13465 White	4	2
OLA 120	55	B25	2	U249	3	70-240	3	16-400	3	13467 Blue	4	2
OLA 150	55	B25	2	U249	3	70-240	3	16-400	3	13467 Blue	4	2
OLA 185	60	B28*	2	U251	3	70-240	3	16-400	3	-	-	2
OLA 240	65	B30*	2	U316	3	70-240	4	16-400	3	-	-	2
OLA 300	65	B32*	2	U317	3	70-240	3	16-400	3	-	-	-
OLA 800	130	Elpress matrix crimp / Matrix holder: V1471 / Matrix: W60M / Punch: W60D / Total two (2) crimps										

*Not suitable with PVL 1300 -series

Product documents

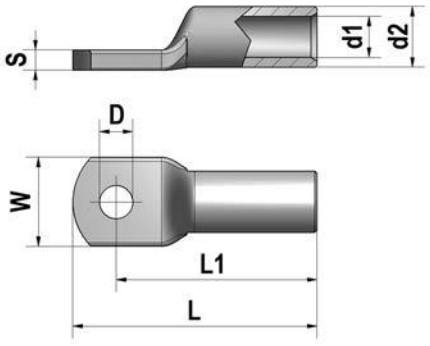

Aluminium splice connector OJA

General/use: OJA splice connector is a crimping-type connector designed to be used when extending aluminium cables. Connectors are also compatible with PEX cables. Installation of OJA connectors can be made with tested and approved crimping tools.

Materials: Connectors are manufactured of aluminium.



STK code	Product code	Product name	Conductor (mm^2)	L (mm)	d1 (mm)	d2 (mm)	Weight (g)	Package (pcs/bag or box)
52 073 30	VB02-0010	OJA 16	16	50	5,4	11	11	3 / 30
52 073 35	VB02-0011	OJA 25	25	60	6,8	13	17	3 / 30
52 073 40	VB02-0001	OJA 35	35	60	8,2	15	21	3 / 30
52 073 45	VB02-0002	OJA 50	50	70	9,6	17	31	3 / 30
52 073 50	VB02-0003	OJA 70	70	70	11,5	21	49	3 / 30
52 073 55	VB02-0004	OJA 95	95	90	13,5	23	69	3 / 30
52 073 60	VB02-0005	OJA 120	120	90	15,5	26	87	3 / 30
52 073 65	VB02-0006	OJA 150	150	100	16,5	26	84	3 / 30
52 073 70	VB02-0007	OJA 185	185	100	18,7	29	111	3 / 30
52 073 75	VB02-0008	OJA 240	240	120	21	31	138	3 / 30
52 073 80	VB02-0009	OJA 300	300	120	22,5	33	121	3 / 30
52 004 02	VB02-0012	OJA 800	800	288	36	60	1379	1 / 15

Product documents

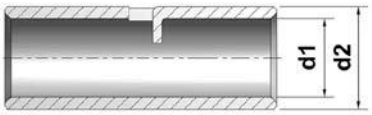

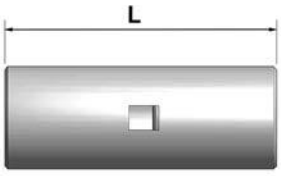

Crimping tools for OJA splice connectors

OJA	Stripping length of cable	Elpress hexagonal die		Burndy round die		Novopress HP 300		Novopress HP 400		Thomas & Betts TBM-8		Klauke (EKM 60 ID-L)
OJA - size (mm^2)	(mm)	Die type	No. of crimps	Die type	No. of crimps	Die type	No. of crimps	Die type	No. of crimps	Die type	No. of crimps	No. of crimps
OJA 16	25	B11	4	U237	2	-	-	-	-	13461 Brown	6	2
OJA 25	30	B13	4	U250	8	-	-	-	-	13462 Green	6	2
OJA 35	30	B14,5	4	U250	8	35-50	6	16-400	6	13462 Black	6	2
OJA 50	35	B16	4	U252	8	35-50	6	16-400	6	13464 Tan	6	2
OJA 70	35	B20	4	U166	6	70-240	6	16-400	6	13464 Ruby	6	2
OJA 95	45	B22	4	U247	4	70-240	6	16-400	6	13465 White	8	4
OJA 120	45	B25	4	U249	4	70-240	6	16-400	6	13467 Blue	8	4
OJA 150	50	B25	4	U249	4	70-240	6	16-400	6	13467 Blue	8	4
OJA 185	50	B28*	4	U251	6	70-240	6	16-400	6	-	-	4
OJA 240	60	B30*	4	U316	6	70-240	10	16-400	6	-	-	4
OJA 300	50	B32*	4	U317	6	70-240	8	16-400	6	-	-	-
OLA 800	130	Elpress matrix crimp / Matrix holder: V1471 / Matrix: W60M / Punch: W60D / Total four (4) crimps										

*Not suitable with PVL 1300 -series

Al/Cu bi-metal cable lug OSCU

General/use: OSCU Al/Cu bi-metal connector is a crimping-type cable lug for aluminium cables. OSCU connector can be directly connected to tin-plated, silver-plated and unplated copper busbars in damp locations. OSCU connectors are delivered with a conical washer and a flat pressure washer. Connectors are also compatible with PEX cables. Installation of OSCUs can be made with tested and approved crimping tools.

Materials: Connectors are manufactured of aluminium and tin plated copper.



STK code	Product code	Product name	Conductor (mm²)	D (mm)	L (mm)	L1 (mm)	d1 (mm)	d2 (mm)	B (mm)	S (mm)	Weight (g)	Package (pcs/bag or box)
52 030 30	VB03-0001	OSCU 16-8	16	8,5	53	41,5	5,4	11	18	6	27	3 / 30
52 030 35	VB03-0002	OSCU 25-8	25	8,5	53,5	42,5	6,8	13	20	7	31	3 / 30
52 030 40	VB03-0003	OSCU 35-8	35	8,5	54,5	43,5	8,2	15	20	8	36	3 / 30
52 030 45	VB03-0004	OSCU 50-10	50	10,5	61,5	48	9,6	17	25	8	53	3 / 30
52 030 50	VB03-0005	OSCU 70-10	70	10,5	74	60	11,5	21	25	12	99	3 / 30
52 030 55	VB03-0006	OSCU 95-12	95	12,5	88	70	13,5	23	32	12	120	3 / 30
52 030 60	VB03-0007	OSCU 120-12	120	12,5	87	70	15,5	26	32	14	133	3 / 30
52 030 65	VB03-0008	OSCU 150-12	150	12,5	94	76	16,5	26	32	12	133	3 / 30
52 030 70	VB03-0009	OSCU 185-12	185	12,5	98	80	18,7	29	34	14	156	3 / 30
52 030 75	VB03-0010	OSCU 240-12	240	12,5	111,5	94	21	31	40	13	187	3 / 30
52 030 80	VB03-0011	OSCU 300-12	300	12,5	98	80	22,5	33	40	14	180	3 / 30

Product documents

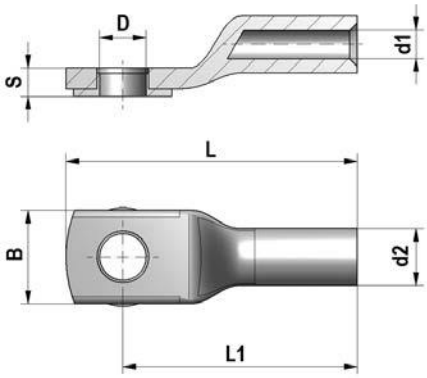

Crimping tools for OSCU bi-metal cable lugs

OSCU	Stripping length of cable	Elpress hexagonal die		Burndy round die		Novopress HP 300		Novopress HP 400		Thomas & Betts TBM-8		Klauke (EKM 60 ID-L)
OSCU - koko (mm²)	(mm)	Die type	No. of crimps	Die type	No. of crimps	Die type	No. of crimps	Die type	No. of crimps	Die type	No. of crimps	No. of crimps
OSCU 16	30	B11	2	U237	2	-	-	-	-	13461 Brown	2	1
OSCU 25	30	B13	2	U250	4	-	-	-	-	13462 Green	2	1
OSCU 35	35	B14,5	2	U250	4	35-50	3	16-400	3	13462 Black	3	1
OSCU 50	40	B16	2	U252	4	35-50	3	16-400	3	13464 Tan	3	1
OSCU 70	45	B20	2	U166	3	70-240	3	16-400	3	13464 Ruby	3	1
OSCU 95	50	B22	2	U247	2	70-240	3	16-400	3	13465 White	4	2
OSCU 120	55	B25	2	U249	3	70-240	3	16-400	3	13467 Blue	4	2
OSCU 150	55	B25	2	U249	3	70-240	3	16-400	3	13467 Blue	4	2
OSCU 185	60	B28*	2	U251	3	70-240	3	16-400	3	-	-	2
OSCU 240	65	B30*	2	U316	3	70-240	4	16-400	3	-	-	2
OSCU 300	65	B32*	2	U317	3	70-240	3	16-400	3	-	-	-

*Not suitable with PVL 1300 -series

Shear bolt cable lug ROLA

General/use: ROLA shear bolt cable lugs are designed to be used with aluminium and copper cables. Joint is made with shear bolts, which makes installations permanent.

Materials: Connectors are made of aluminium and plated with tin. Shear bolts are made of tin plated brass.



STK code	Product code	Product name	Conductor (mm²)	Tightening torque	D (mm)	AV (mm)	L (mm)	B (mm)	S (mm)	Weight (g)	Package (pcs/bag or box)
52 011 74	VB05-0001	ROLA 10-50 M12 Al-Cu	10-50	7-10 Nm	12,5	10	77	20	7	49	3
52 011 82	VB05-0002	ROLA 25-95 M12 Al-Cu	25-95	21-27 Nm	12,5	14	93	24	8	107	3
52 011 83	VB05-0003	ROLA 95-185 M12 Al-Cu	95-185	36-43 Nm	12,5	18	103	29	9	163	3
52 011 87	VB05-0004	ROLA 185-300 M12 Al-Cu	185-300	48-56 Nm	12,5	22	123	34	10	300	3

Product documents

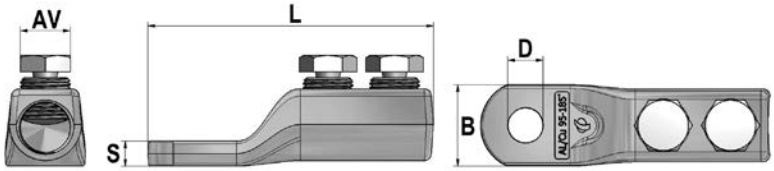

Al/Al Shear bolt splice connector

General/use: Shear bolt splice connector are designed for extending aluminium cables within the size range from 16 to 300 mm². Joint is made with shear bolts which makes installations permanent. Contact surfaces are treated with a corrosion preventing grease.

Materials: Splice connectors are made of unplated aluminium.

Standard: EN IEC 61238-1-1:2019



STK code	Product code	Type	Conductor (mm²)	L (mm)	B (mm)	AV (mm)	Weight (g)	Package (pcs)
52 012 82	VB04-0015	4-screw 1 kV	6-25 Al/Cu	50	11	3	15	4/40
52 017 04	VB04-0027	2-screw 1 kV	16-50 Al	43	17	11	26	4/40
52 017 05	VB04-0016	4-screw 1 kV	16-50 Al	75	17	11	47	4/40
52 017 03	VB04-0028	2-screw 1 kV	70-95 Al	51	20	14	35	4/40
52 017 06	VB04-0017	4-screw 1 kV	70-95 Al	91	20	14	65	4/40
52 017 07	VB04-0018	4-screw 1 kV	120-185 Al	112	29	18	150	4/40
52 017 08	VB04-0019	4-screw 1 kV	240-300 Al	136	36	22	309	4/40

Product documents





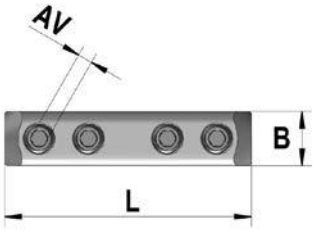

VB04-0015

Low Voltage cable joint package



General/use: Package includes connectors and accessories for connecting 4- or 5- conductor systems. Screw connectors can be used for example AXMK cable connections. Screw connectors are pretreated with connection grease for the corrosion prevention. Installation is made with shear head screws (excl. 1,5-6 connectors which are installed with crimping tools and 6-25 connectors which are installed with allen key). VB04-0031 package includes connectors and shrink tubes for connecting 4- or 5-conductor <1kV Voltage copper cables.

Materials:
Connectors: Aluminium
(VB04-0031: Tin plated copper)
Heat shrink tubes: Modied Polyethylene

Certification and applied regulations:
EN 61238-1:2003

Product documents

Cable joint packages for 4-conductor systems (Al/Al)

STK code	Product code	Product name	Conductor (mm^2)	Weight (g)	Package (pcs)
52 012 86	VB04-0021	Al/Al Low Voltage cable joint package 16-50 mm^2	4xAl 16-50	564	Acc. to order
52 012 87	VB04-0022	Al/Al Low Voltage cable joint package 3x16-50 + 6-25 mm^2	3xAl 16-50 + 1xAl/Cu 6-25	404	Acc. to order
52 012 88	VB04-0023	Al/Al Low Voltage cable joint package 4x70-95 mm^2	4xAl 70-95	842	Acc. to order
52 012 89	VB04-0024	Al/Al Low Voltage cable joint package 3x70-95 + 6-25 mm^2	3xAl 70-95 + 1xAl/Cu 6-25	786	Acc. to order
52 012 90	VB04-0025	Al/Al Low Voltage cable joint package 4x120-185 mm^2	4xAl 120-185	1371	Acc. to order
52 012 91	VB04-0026	Al/Al Low Voltage cable joint package 4x240-300 mm^2	4xAl 240-300	2167	Acc. to order

Cable joint packages for 5-conductor systems

STK code	Product code	Product name	Conductor (mm^2)	Weight (g)	Package (pcs)
52 017 11	VB04-0031	Low Voltage cable joint package 5x1,5-6 mm^2	5xCu 1,5-6	100	Acc. to order
52 017 13	VB04-0034	Low Voltage cable joint package 5x6-25 mm^2	5xAl/Cu 6-25	235	Acc. to order
52 017 14	VB04-0035	Low Voltage cable joint package 4x16-50 + 6-25 mm^2	4xAl 16-50 + 1xAl/Cu 6-25	420	Acc. to order
52 017 15	VB04-0036	Low Voltage cable joint package 4x70-95 + 16-50 mm^2	4xAl 70-95 + 1xAl/Cu 16-50	860	Acc. to order
52 017 16	VB04-0037	Low Voltage cable joint package 4x120-185 mm^2 + 70-95 mm^2	4xAl 120-185 + 1xAl/Cu 70-95	1400	Acc. to order
52 017 17	VB04-0038	Low Voltage cable joint package 4x240-300 mm^2 + 70-95 mm^2	4xAl 240-300 + 1xAl/Cu 70-95	2200	Acc. to order

Al/Cu Shear bolt splice connectors



General/use: Shear bolt splice connectors are suitable for aluminium and copper conductors. Stranded, sector shaped and circular conductors are allowed. The installation can be performed with shear head screws. Connector includes dividing wall so it is suitable for aluminium cable and copper cable coupling.

Materials: Splice connectors are made of tin plated aluminium

Standards: EN IEC 61238-1-1:2019

STK code	Product code	Type	Conductor (mm^2)	L (mm)	B (mm)	AV (mm)	Weight (g)	Package (pcs)
52 012 82	VB04-0015	4 screw 1 kV	6-25 Al/Cu	50	11	3	15	4/40
52 017 44	VB04-0040	4 screw 1 kV	16-50 Al/Cu	75	17	11	50	4/40
52 017 48	VB04-0041	4 screw 1 kV	70-95 Al/Cu	91	20	14	66	4/40
52 017 49	VB04-0042	4 screw 1 kV	120-185 Al/Cu	112	29	18	184	4/40
52 017 53	VB04-0043	4 screw 1 kV	240-300 Al/Cu	136	36	22	312	4/40

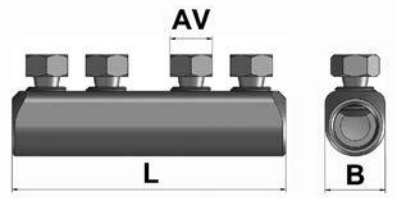

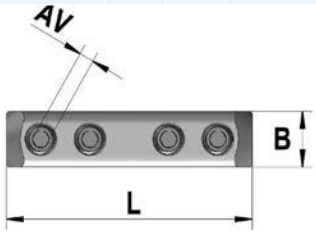

Product documents



Cable joint packages for 4-conductor systems (Al/Cu)

STK code	Product code	Product name	Conductor (mm^2)	Weight (g)	Package (pcs)
5201285	VB04-0020	Al/Cu Low Voltage cable joint package 4x6-25 mm^2	4xAl/Cu 6-25	225	Acc. to order
5201758	VB04-0044	Al/Cu Low Voltage cable joint package 16-50 mm^2	4xAl/Cu 16-50	576	Acc. to order
5201759	VB04-0045	Al/Cu Low Voltage cable joint package 4x70-95 mm^2	4xAl/Cu 70-95	846	Acc. to order
5201763	VB04-0046	Al/Cu Low Voltage cable joint package 4x120-185 mm^2	4xAl/Cu 120-185	1507	Acc. to order
5201764	VB04-0047	Al/Cu Low Voltage cable joint package 4x240-300 mm^2	4xAl/Cu 240-300	2179	Acc. to order

Universal connector - OL-series

General/use: Ouneva OL-connectors are designed for connecting aluminium and copper cables (6–300 mm²). Installation can be performed without any special tools.

Materials: Connectors are made of stainless steel and copper.

Certification and applied regulations:
UL 486E



STK code	Product code	Product name	Conductor (mm²)	In (A)	D (mm)	H (mm)	H1 (mm)	L (mm)	L1 (mm)	B (mm)	AV (mm)	S (mm)	Tightening torque	Weight (g)	Package (pcs)
19 141 91	VC01-0002	OL 6-70	1xAl/Cu 6-70	270	7	30	-	37	7,5	15	4	4	5,6 Nm (6-70 mm²)	44	30
19 141 92	VC01-0006	OL 6-70M	1xAl/Cu 6-70	270	7	23	-	37	7,5	15	4	4	5,6 Nm (6-70 mm²)	36	30
19 141 97	VC01-0028	OL 6-70T	1xAl/Cu 6-70	270	-	30	-	38	18	10	4	4	5,6 Nm (6-70 mm²)	44	30
19 123 87	VC01-0007	OL 6-70MZ	1xAl/Cu 6-70	270	7	23	15	46	8	15	4	4	5,6 Nm (6-70 mm²)	47	30
19 141 93	VC01-0005	OL 25-95 D9	1xAl/Cu 25-95	320	9	33	-	50	13	20	4	5	20 Nm (25-95 mm²)	76	15
19 123 86	VC01-0024	OL 25-95 D11	1xAl/Cu 25-95	320	11	33	-	50	13	20	4	5	20 Nm (25-95 mm²)	74	15
19 141 98	VC01-0029	OL 25-95T	1xAl/Cu 25-95	320	-	33	-	50	20	10	4	5	20 Nm (25-95 mm²)	69	15
19 120 15	VC01-0013	OL 25-150	1xAl/Cu 25-150	285	11	38	-	60	13,5	23	5	6	30 Nm (25-150 mm²)	131	15
19 123 30	VC01-0008	OL 70-185Z	1xAl/Cu 70-185	400	13	38	27	79	15,5	25	5	6	40 Nm (70-185 mm²)	195	15
19 123 38	VC01-0030	OL 95-240M D9	1xAl/Cu 95-240	400	9	40	-	61	12	25	5	6	40 Nm (95-240 mm²)	142	15
19 141 87	VC01-0020	OL 95-240M D11	1xAl/Cu 95-240	400	11	40	-	61	12	25	5	6	40 Nm (95-240 mm²)	140	15
19 141 95	VC01-0001	OL 185-300	1xAl/Cu 185-300	560	13	52	-	76	17	30	6	8	70 Nm (185-300 mm²)	287	3
19 123 33	VC01-0009	OL 185-300Z	1xAl/Cu 185-300	560	13	52	30	87	16,5	30	6	8	70 Nm (185-300 mm²)	350	3
19 120 19	VC01-0011	OL 2x(50-150)	2xAl/Cu 50-150	579	11	64	-	59	12	25	5	8	40 Nm (50-150 mm²)	240	3
19 120 20	VC01-0014	OL 2x(95-240) D11	2xAl/Cu 95-240	806	11	78	-	60	13	30	6	8	70 Nm (95-240 mm²)	345	3
19 123 57	VC01-0031	OL 2x(95-240) D13	2xAl/Cu 95-240	806	13	78	-	60	13	30	6	8	70 Nm (95-240 mm²)	343	3
19 141 39	VC01-0019	OL 2x(185-300)	2xAl/Cu 185-300	800	13	91	-	85	20	38	6	8	70 Nm (185-300 mm²)	544	3
19 141 39	VC01-0019	OL 2x(185-300)	2xAl/Cu 185-300	800	13	91	-	85	20	38	6	8	70 Nm (185-300 mm²)	544	3

Product documents

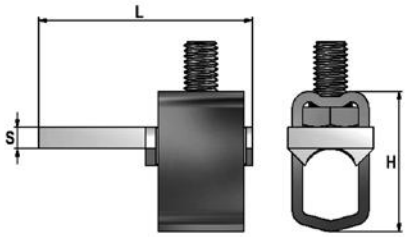

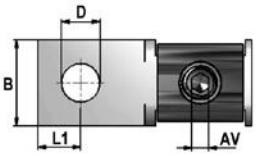

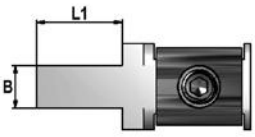

OL6-70T / OL25-95T

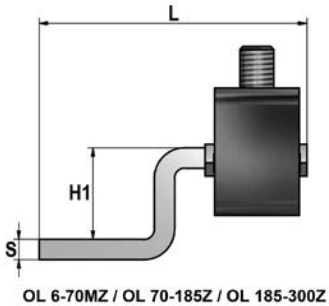

OL 6-70MZ / OL 70-185Z / OL 185-300Z

Installation

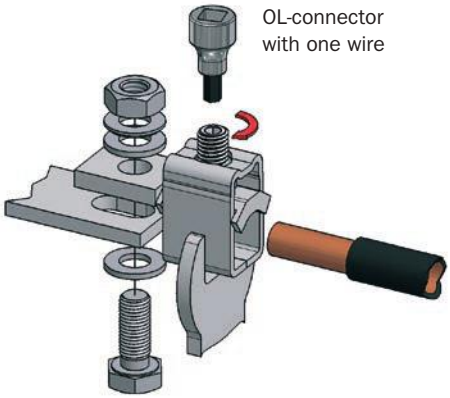

OL-connector with one wire

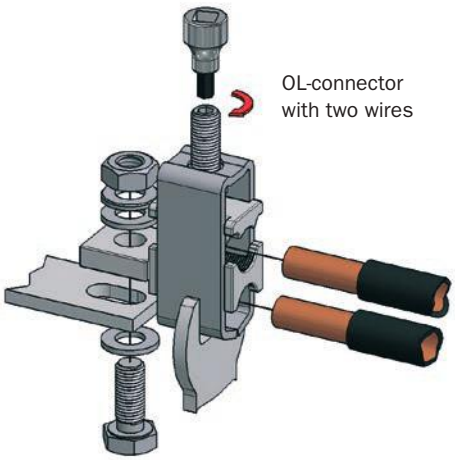

OL-connector with two wires

Universal connector - OT-series

General/use: Ouneva OT-connectors are designed for connecting aluminium and copper cables (6–300 mm²). Installation can be performed without any special tools.

Materials: Connectors are made of aluminium and plated with tin.



STK code	Product code	Product name	Conductor (mm²)	Un (V)	In (A)	L (mm)	L1 (mm)	L2 (mm)	W (mm)	H (mm)	D (mm)	S (mm)	AV (mm)	Tightening torque	Weight (g)	Package (pcs)
19 123 04	VC02-0006	OT 1,5-50	1xAl/Cu 1,5-50	690	160	35	21	10,5	14	21,5	8,5	4	5	3,5 Nm (1,5-10 mm²), 10 Nm (16-50 mm²)	10	30
19 123 00	VC02-0001	OT 6-95	1xAl/Cu 6-95	690	245	46	26	13	20	30	10,5	5	6	12 Nm (6-35 mm²), 22 Nm (50-95 mm²)	22	30
19 123 01	VC02-0003	OT 16-120	1xAl/Cu 16-120	690	280	64	37	17	25	35	12,5	6	6	12 Nm (16-35 mm²), 25 Nm (50-120 mm²)	50	30
19 123 06	VC02-0013	OT 25-150	1xAl/Cu 25-150	690	280	62	35	15	26	39	12,5	7,25	6	14 Nm (25-150 mm²), 30 Nm (70-150 mm²)	58	20
19 123 05	VC02-0007	OT 35-240	1xAl/Cu 35-240	690	425	74	37	15	32	44	12,5	8	8	26 Nm (35-120 mm²), 40 Nm (150-240 mm²)	115	10
19 123 08	VC02-0015	OT 95-300	1xAl/Cu 95-300	690	490	64	36	18	32	48	12,5	10,5	6	33 Nm (95-185 mm²), 60 Nm (240-300 mm²)	134	10
19 123 03	VC02-0005	OT 2x(25-120)	2xAl/Cu 25-120	690	400	74	28	13	26	62	11	13	6	10 Nm (25-35 mm²), 20 Nm (50-120 mm²)	186	10
19 123 02	VC02-0004	OT 2x(70-240)	2xAl/Cu 70-240	690	630	99	35	15	38	70	13	13	8	35 Nm (70-120 mm²), 45 Nm (150-240 mm²)	456	10

Product documents

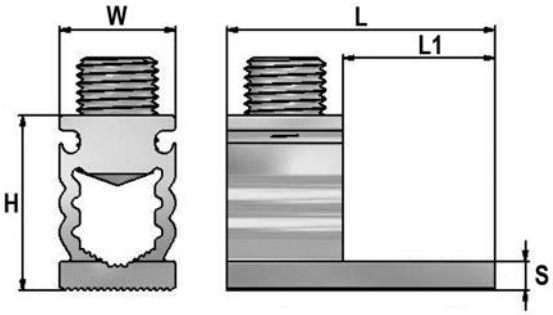

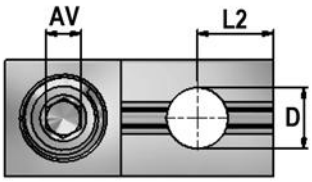

Insulated universal connector - OLE-series

General/use: Universal connectors with insulation. OLE connectors are same as OL-connectors (**page 20**) but supplied with insulated mountings and covers. Several connectors can be mounted alongside by fastening mountings with screws to each other. OLE-connectors have screw mounting.

Materials:
Connector frame: Stainless steel,
busbar of tin plated copper
Busbar: Tin plated copper
Housing: Polycarbonate and polypropylene

Product documents



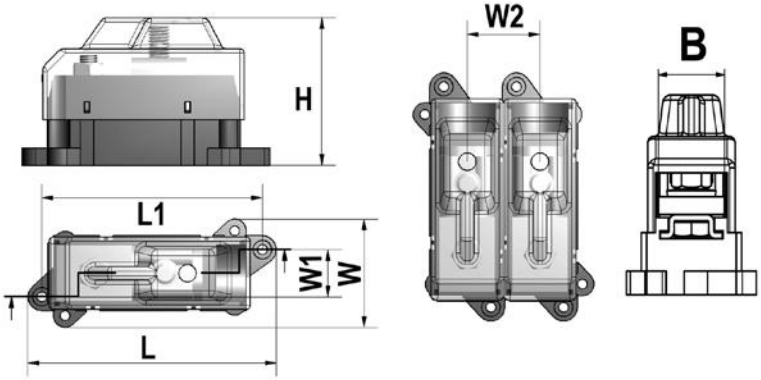

STK code	Product code	Product name	Conductor (mm^2)	Un (V)	In (A)	L (mm)	L1 (mm)	H (mm)	W (mm)	W1 (mm)	W2 (mm)	B (mm)	Tightening torque	Weight (g)	Package (pcs)
19 141 40	VC03-0001	OLE 25-95	1xAl/Cu 25-95	690	320	87	77	60	40	16,6	29	20	20 Nm (25-95 mm^2)	119	12
19 141 41	VC03-0002	OLE 95-185	1xAl/Cu 95-185	690	400	112	100	68	49	21,4	34	25	40 Nm (95-185 mm^2)	237	10
19 141 42	VC03-0003	OLE 185-300	1xAl/Cu 185-300	690	560	143	127	86	57	30	41	30	70 Nm (185-300 mm^2)	260	8

Insulated universal connector - OTE-series

General/use: Ouneva OTE-connectors are designed to be used when connecting aluminium and copper cables (1,5–300 mm²). OTE-connectors are same products as OT-connectors (**page 21**), but supplied with insulating mountings. OTE-connectors have screw mounting. Several connectors can be mounted alongside by fastening mountings with screws to each other.

Materials:
Connector: Tin plated aluminium
Insulating base: Polyamide

Product documents



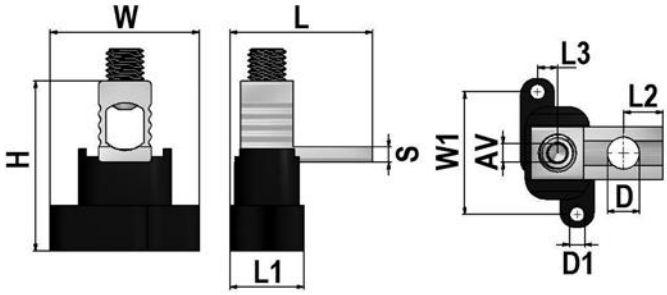

STK code	Product code	Product name	Conductor (mm²)	Un (V)	In (A)	L (mm)	L1 (mm)	L2 (mm)	L3 (mm)	H (mm)	W (mm)	W1 (mm)	D (mm)	D1 (mm)	S (mm)	AV (mm)	Tightening torque	Weight (g)	Package (pcs)
19 123 13	VC04-0007	OTE 1,5-50	1xAl/Cu 1,5-50	690	160	37,8	19,5	10,5	5,25	44,5	39,5	32,5	8,5	4	4	5	3,5 Nm (1,5-10 mm²), 10 Nm (16-50 mm²)	20	30
19 123 09	VC04-0003	OTE 6-95	1xAl/Cu 6-95	690	245	45,8	19,5	13	5,25	54	39,5	32,5	10,5	4	5	6	12 Nm (6-35 mm²), 22 Nm (50-95 mm²)	32	30
19 123 10	VC04-0004	OTE 16-120	1xAl/Cu 16-120	690	280	64	25,5	17	5,25	57	57,5	50,5	12,5	4	6	6	12 Nm (16-35 mm²), 25 Nm (50-120 mm²)	66	30
19 123 14	VC04-0008	OTE 25-150	1xAl/Cu 25-150	690	280	62	25,5	15	5,25	61	57,5	50,5	12,5	4	7,25	6	14 Nm (25-150 mm²), 30 Nm (70-150 mm²)	74	20
19 123 16	VC04-0010	OTE 35-240	1xAl/Cu 35-240	690	425	74	25,5	15	5,25	67,5	57,5	50,5	12,5	4	8	8	26 Nm (35-120 mm²), 40 Nm (150-240 mm²)	131	20
19 123 15	VC04-0009	OTE 95-300	1xAl/Cu 95-300	690	490	64	26	18	5,25	73	57,5	50,5	12,5	4	10,5	6	33 Nm (95-185 mm²), 60 Nm (240-300 mm²)	152	10
19 123 12	VC04-0006	OTE 2x(25-120)	2xAl/Cu 25-120	690	400	77	58	13	21	89	74	58	11	6	13	6	10 Nm (25-35 mm²), 20 Nm (50-120 mm²)	250	10
19 123 11	VC04-0005	OTE 2x(70-240)	2xAl/Cu 70-240	690	630	99	58	15	21	99	74	58	13	6	13	8	35 Nm (70-120 mm²), 45 Nm (150-240 mm²)	522	8

OTL 1000 V

General/use: New OTL 1000 V connector series offers the best quality, safety and installation features on the market. OTL-connectors are designed to be used when connecting and branching aluminium and copper cables.

Materials: Bodies of the connectors are made of aluminium and plated with tin. Insulating covers are made of UL 94 V-0 class polyamide.

Certification and applied regulations:
EN 60947-7-1:2009, EN 61238-1:2003

Six reasons to choose OTL 1000 V

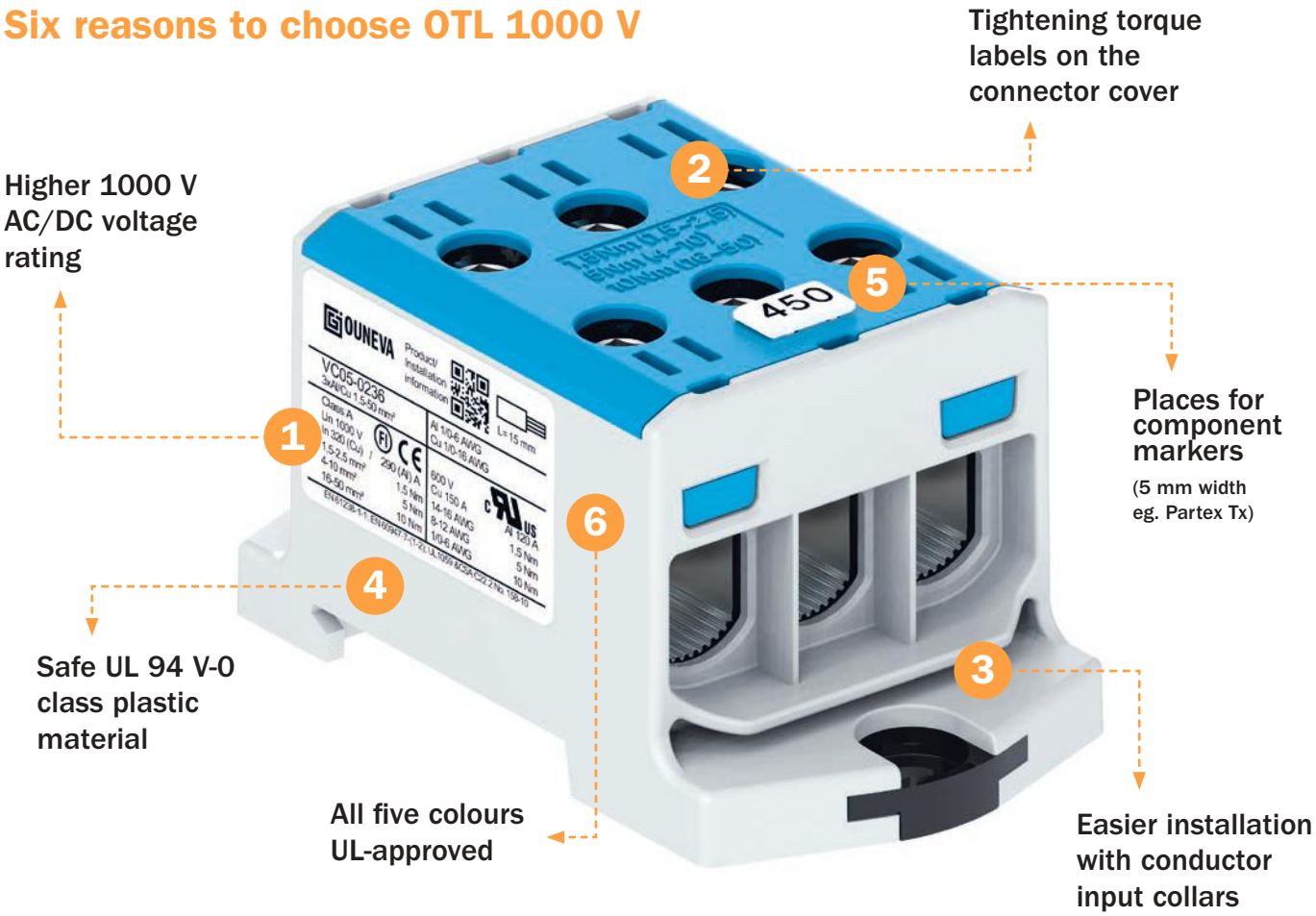

Material classification according to UL 94 standard (vertical burning test)

Criteria Conditions	94V-0	94V-1	94V-2
Total flaming combustion for each specimen	≤ 10 sec	≤ 30 sec	≤ 30 sec
Total flaming combustion for all 5 specimens of any set	≤ 50 sec	≤ 250 sec	≤ 250 sec
Flaming and glowing combustion for each specimen after second burner flame application	≤ 30 sec	≤ 60 sec	≤ 60 sec
Cotton ignited by flaming drips from any specimen	No	No	Yes

Product documents

Certification and product safety

When choosing electrical connector, always make sure to select reliable and safe, certified connector. The requirements for connectors used with copper conductors inside switchgears and similar appliances are specified in standard EN 60947-7-1:2009.
All connectors used inside switchgears or similar appliances must fulfil these requirements.

The requirements for connectors designated to be used with aluminium power cables are specified in standard EN 61238-1:2003. Connectors that have been tested and certified in accordance with standard EN 61238-1:2003 are divided into two classes.

- Class A (short circuit tested) - usage examples: feed-in connections, switchgears/appliances, universal
- Class B (not short circuit tested) - usage limited only to special circuits protected by fast-acting fuses

Ouneva OTL-connectors are tested and certified class A connectors, that are compatible with copper and aluminium conductors.

For choosing safe and reliable connector, always make sure that the terminal is equipped with CE and Class A markings with the symbol of certifying institute, for example FI -mark.

Insulated universal connector - OTL-series

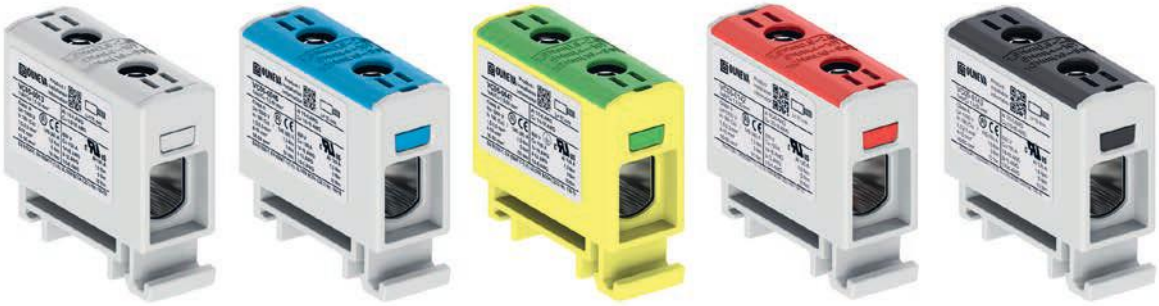

OTL-connectors
1xAl/Cu 1,5-50 mm²

DIN-rail mounting

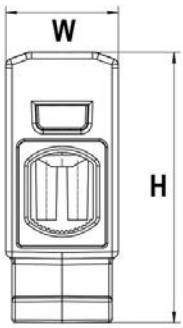

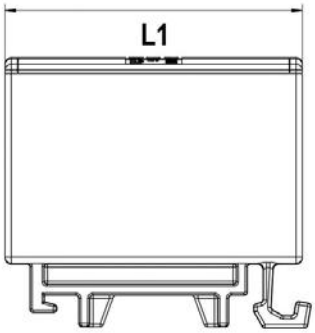

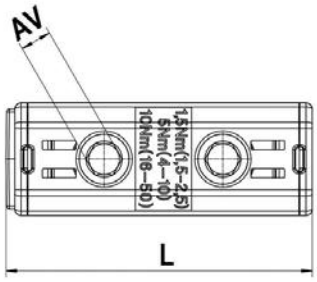

STK code	Product code	Color	Conductor (mm²)	Un (V)	In (A)	Tightening torque	L (mm)	L1 (mm)	H (mm)	W (mm)	AV (mm)	Weight (g)	Package (pcs)	UL approval
19 141 00	VC05-0010	Grey	1xAl/Cu 1,5-16	1000	82 (Cu)/ 75 (Al)	1,5 Nm (1,5 mm²), 3,5 Nm (2,5-6 mm²), 7 Nm (10-16 mm²)	45	42	39,5	13,5	4	17	30	Yes
19 141 01	VC05-0001	Blue												Yes
19 141 02	VC05-0045	Yellow / Green												Yes
19 120 10	VC05-0140	Red												Yes
19 120 14	VC05-0141	Black												Yes
19 120 59	VC05-0191	Grey	1xAl/Cu 2,5-35	1000	135 (Cu)/ 120 (Al)	3 Nm (2,5-16 mm²), 6 Nm (25-35 mm²)	45	45	40	16	4	27	30	Yes
19 120 60	VC05-0192	Blue												Yes
19 120 61	VC05-0193	Yellow / Green												Yes
19 123 56	VC05-0245	Red												Yes
19 123 55	VC05-0244	Black												Yes
19 141 03	VC05-0013	Grey	1xAl/Cu 1,5-50	1000	160 (Cu)/ 145 (Al)	1,5 Nm (1,5–2,5 mm²), 5 Nm (4-10 mm²), 10 Nm (16–50 mm²)	50	48	43	18	5	31	50	Yes
19 141 04	VC05-0046	Blue											30	Yes
19 141 05	VC05-0047	Yellow / Green											30	Yes
19 120 24	VC05-0142	Red											30	Yes
19 120 25	VC05-0143	Black											30	Yes

Insulated universal connector - OTL-series



OTL-connectors
1xAl/Cu 6-240 mm²

DIN-rail / screw mounting

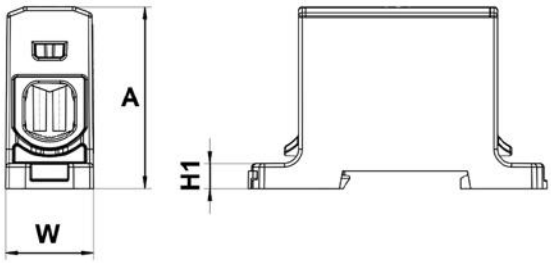

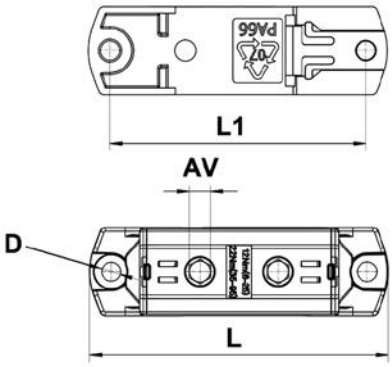

	STK code	Product code	Color	Conductor (mm²)	Un (V)	In (A)	Tightening torque	L (mm)	L1 (mm)	H (mm)	H1 (mm)	W (mm)	AV (mm)	D (mm)	Weight (g)	Package (pcs)	UL approval
	19 141 12	VC05-0019	Grey	1xAl/Cu 6-95	1000	245 (Cu)/ 220 (Al)	12 Nm (6-25 mm²), 22 Nm (35-95mm²)	84	72	51	7	25	6	5,5	68	20	Yes
	19 141 13	VC05-0050	Blue													10	Yes
	19 141 14	VC05-0051	Yellow / Green													10	Yes
	19 120 26	VC05-0144	Red													10	Yes
	19 120 27	VC05-0145	Black													10	Yes
	19 141 24	VC05-0028	Grey	1xAl/Cu 25-150	1000	320 (Cu)/ 290 (Al)	14 Nm (25-50 mm²), 35 Nm (70-150 mm²)	84	72	54	7	31	6	5,5	103	20	Yes
	19 141 25	VC05-0029	Blue													10	Yes
	19 141 26	VC05-0030	Yellow / Green													10	Yes
	1914338	VC05-0475	Red													10	Yes
	1914339	VC05-0476	Black													10	Yes
	19 141 30	VC05-0034	Grey	1xAl/Cu 35-240	1000	425 (Cu)/ 380 (Al)	26 Nm (35-120 mm²), 46 Nm (150-240 mm²)	106	94	65	7	37	8	5,5	194	10	Yes
	19 141 31	VC05-0035	Blue													3	Yes
	19 141 32	VC05-0036	Yellow / Green													3	Yes
	1914340	VC05-0477	Red													3	Yes
	1914341	VC05-0478	Black													3	Yes
NEW	19 123 70	VC05-0213*	Grey	1xAl/Cu 35-300	1000	490 (Cu) / 440 (Al)	30 Nm (95-150 mm²), 60 Nm (185-300 mm²)	122	110	71	7	44	8	5,5	195	3	No
NEW	19 123 71	VC05-0214*	Blue													3	No
NEW	19 123 72	VC05-0215*	Yellow / Green													3	No
NEW	19 143 65	VC05-0493*	Red													3	No
NEW	20 143 66	VC05-0494*	Black													3	No

*Available Q2/2023

Insulated universal connector - OTL-series



OTL-connectors 2xAl/Cu 1,5-50 mm²

DIN-rail mounting,
branching connector

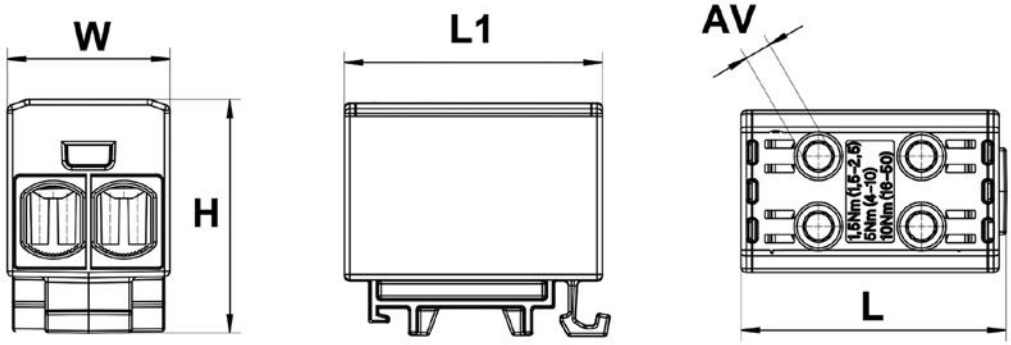

STK code	Product code	Color	Conductor (mm²)	Un (V)	In (A)	Tightening torque	L (mm)	L1 (mm)	H (mm)	W (mm)	AV (mm)	Weight (g)	Package (pcs)	UL approval
19 120 73	VC05-0153	Grey	2xAl/Cu 2,5-35	1000	135 (Cu)/ 120 (Al)	3 Nm (2,5–16 mm²), 6 Nm (25-35 mm²)	46	45	40	27	4	44	18	Yes
19 120 74	VC05-0154	Blue												Yes
19 120 75	VC05-0155	Yellow / Green												Yes
19 143 42	VC05-0479	Red												Yes
19 143 43	VC05-0480	Black												Yes
19 141 06	VC05-0016	Grey	2xAl/Cu 1,5-50	1000	320 (Cu)/ 290 (Al)	1,5 Nm (1,5–2,5 mm²), 5 Nm (4-10 mm²), 10 Nm (16–50 mm²)	49	48	43	30	5	51	15	Yes
19 141 07	VC05-0048	Blue												Yes
19 141 08	VC05-0049	Yellow / Green												Yes
19 120 29	VC05-0146	Red												Yes
19 120 30	VC05-0147	Black												Yes

Insulated universal connector - OTL-series



OTL-connectors
2xAl/Cu 6-240 mm²

DIN-rail / screw mounting,
branching connector

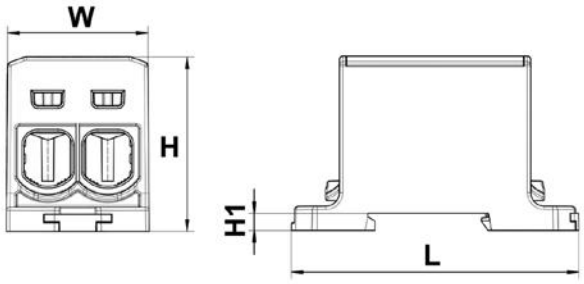

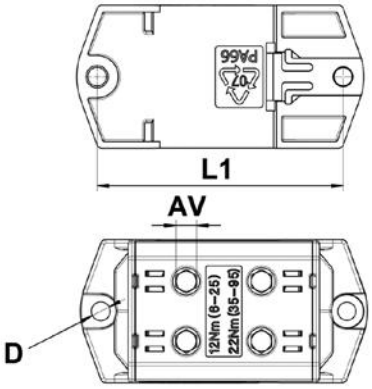

STK code	Product code	Color	Conductor (mm²)	Un (V)	In (A)	Tightening torque	L (mm)	L1 (mm)	H (mm)	H1 (mm)	W (mm)	AV (mm)	D (mm)	Weight (g)	Package (pcs)	UL approval
19 141 15	VC05-0042	Grey	2xAl/Cu 6-95	1000	245 (Cu)/ 220 (Al)	12 Nm (6-25 mm²), 22 Nm (35-95mm²)	84	72	51	7	42	6	5,5	121	30	Yes
19 141 16	VC05-0043	Blue													15	Yes
19 141 17	VC05-0044	Yellow / Green													15	Yes
19 120 38	VC05-0148	Red													15	Yes
19 120 39	VC05-0149	Black													15	Yes
19 141 27	VC05-0031	Grey	2xAl/Cu 25-150	1000	320 (Cu)/ 290 (Al)	14 Nm (25-50 mm²), 30 Nm (70-150 mm²)	84	72	54	7	51	6	5,5	165	10	Yes
19 141 28	VC05-0032	Blue													5	Yes
19 141 29	VC05-0033	Yellow / Green													5	Yes
19 143 44	VC05-0481	Red													5	Yes
19 143 45	VC05-0482	Black													5	Yes
19 141 33	VC05-0037	Grey	2xAl/Cu 35-240	1000	425 (Cu)/ 380 (Al)	26 Nm (35-120 mm²), 40 Nm (150-240 mm²)	106	94	65	7	60	8	5,5	335	6	Yes
19 141 34	VC05-0038	Blue													3	Yes
19 141 35	VC05-0039	Yellow / Green													3	Yes
19 143 46	VC05-0483	Red													3	Yes
19 143 47	VC05-0484	Black													3	Yes

Insulated universal connector - OTL-series



Multiple pole OTL-connectors

DIN-rail mounting, 3- and 5-pole universal connector (screw mounting available for VC05-0012).

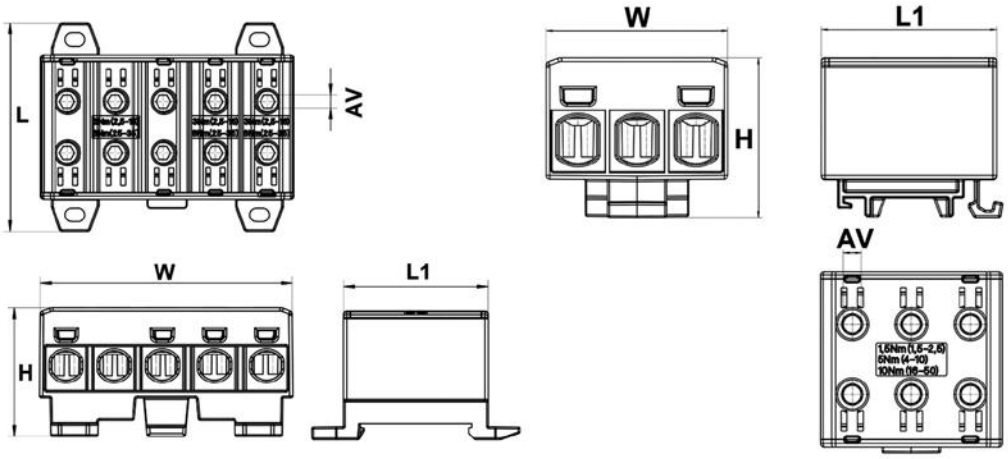

STK code	Product code	Color	Conductor (mm²)	Un (V)	In (A)	Tightening torque	L (mm)	L1 (mm)	H (mm)	W (mm)	AV (mm)	Weight (g)	Package (pcs)	UL approval
19 120 97	VC05-0011	Grey (L1, L2, L3)	3xAl/Cu 2,5-35	1000	3x135 (Cu) / 3x120 (Al)	3 Nm (2,5-16 mm²), 6 Nm (25-35 mm²)	46	45	40	46	4	70	20	Yes
19 120 98	VC05-0012	Grey, Blue, Yellow/Green (L1, L2, L3, N, PE)	5xAl/Cu 2,5-35	1000	5x135 (Cu) / 5x120 (Al)	3 Nm (2,5-16 mm²), 6 Nm (25-35 mm²)	65	45	40	79	4	120	10	Yes
19 141 09	VC05-0054	Grey (L1, L2, L3)	3xAl/Cu 1,5-50	1000	3x160 (Cu)/ 3x145 (Al)	1,5 Nm (1,5-2,5 mm²), 5 Nm (4-10 mm²), 10 Nm (16-50 mm²)	49	48	43	49	5	81	20	Yes

OTL-connector kit

Connector kit includes connectors for all three phases, neutral (N) and for protective earth (PE).

Connectors are compatible with aluminium and copper cables with wire range of 1,5–50 mm². Connectors are DIN-rail mounted.



STK code	Product code	Package (pcs)
19 120 01	VC05-0139	10

Contents of the connector kit:

Product code	Qty (pcs)
VC05-0054	1
VC05-0046	1
VC05-0047	1

Insulated universal connector - OTL-series



OTL-connectors
3xAl/Cu 1,5-300 mm²

DIN-rail / screw mounting,
branching connector

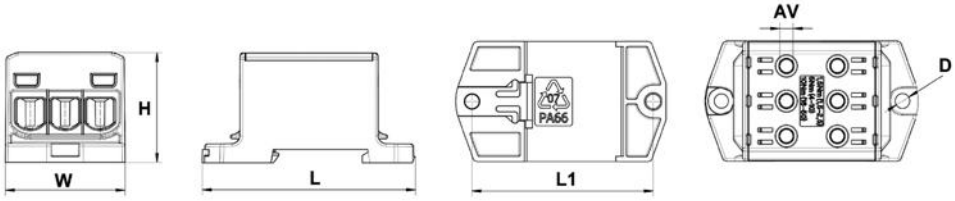

STK code	Product code	Color	Conductor (mm²)	Un (V)	In (A)	Tightening torque	L (mm)	L1 (mm)	H (mm)	W (mm)	AV (mm)	Weight (g)	Package (pcs)	UL approval
19 123 58	VC05-0233	Grey	3xAl/Cu 1,5-50	1000	320 (Cu) / 290 (Al)	1,5 Nm (1,5-2,5 mm²), 5 Nm (4-10 mm²), 10 Nm (16-50 mm²)	79,5	67,5	40,8	44,6	5	109	20	Yes
19 123 59	VC05-0236	Blue												Yes
19 123 60	VC05-0237	Yellow / Green												Yes
19 143 48	VC05-0485	Red												Yes
19 143 49	VC05-0486	Black												Yes
19 123 61	VC05-0234	Grey	3xAl/Cu 6-95	1000	490 (Cu) / 440 (Al)	12 Nm (6-25 mm²), 22 Nm (35-95mm²)	83,8	72	51	58,5	6	178	6	Yes
19 123 62	VC05-0238	Blue												Yes
19 123 63	VC05-0239	Yellow / Green												Yes
19 143 50	VC05-0487	Red												Yes
19 143 51	VC05-0488	Black												Yes
19 123 64	VC05-0235	Grey	3xAl/Cu 25-150	1000	640 (Cu) / 500 (Al)	14 Nm (25-50 mm²), 30 Nm (70-150 mm²)	84	72	54	71,3	6	246	6	Yes
19 123 65	VC05-0240	Blue												Yes
19 123 66	VC05-0241	Yellow / Green												Yes
19 143 52	VC05-0489	Red												Yes
19 143 53	VC05-0490	Black												Yes
19 143 09	VC05-0381	Grey	3xAl/Cu 95-300	1000	630 (Cu) / 630 (Al)	35 Nm (95-150 mm²), 45 Nm (185-300 mm²)	120	108	78	101	8	680	1	No
19 143 10	VC05-0392	Blue												No
19 143 11	VC05-0393	Yellow / Green												No
19 143 54	VC05-0491	Red												No
19 143 55	VC05-0492	Black												No

Terminal shroud for OTL-connector

Terminal shrouds are insulation covers for OTL-connectors. Terminal shrouds are compatible with all OTL-connectors from 50 to 300 mm².



STK code	Product code	Product name	Weight (g)	Package (pcs)
19 120 76	0D02-0564	Terminal shroud for OTL 50	0,7	25
19 120 77	0D02-0548	Terminal shroud for OTL 95	1,4	25
19 120 78	0D02-0550	Terminal shroud for OTL 150	1,6	25
19 120 79	0D02-0551	Terminal shroud for OTL 240	2,6	25
19 143 36	0D02-0778	Terminal shroud for OTL 300	3,2	25

OTL Lite



Versatile, compact and even more convenient OTL Lite is born. Feel familiar OTL experience now in new form.

OTL-connectors 1xAl/Cu 1,5-50 mm²

DIN-rail mounting

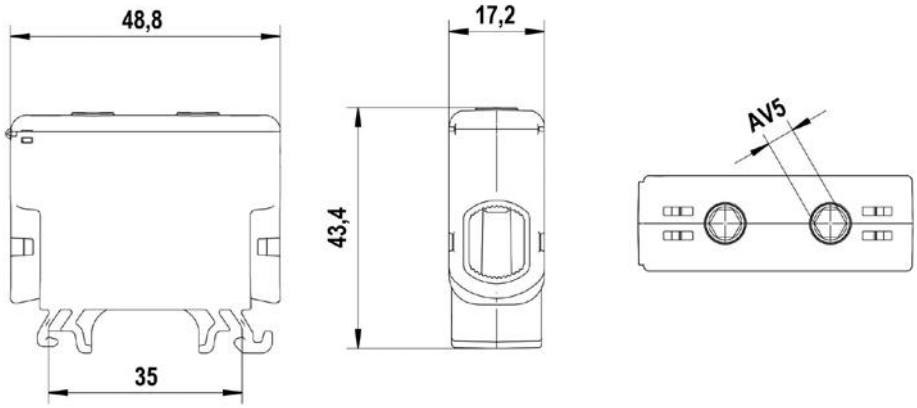

STK code	Product code	Color	Conductor (mm²)	Un (V)	In (A)	Tightening torque	Weight (g)	Package (pcs)
19 142 64	VC05-0380	Grey	1xAl/Cu 1,5-50	1000	160 (Cu) / 145 (Al)	1,5 Nm (1,5-2,5 mm²), 5 Nm (4-10 mm²), 10 Nm (16-50 mm²)	31	50
19 142 12	VC05-0317	Blue						30
19 142 13	VC05-0319	Yellow/Green						30
19 142 14	VC05-0320	Red						30
19 142 11	VC05-0316	Black						30

Product documents

Terminal shroud for OTL Lite

Insulation covers for OTL Lite.

STK code	Product code	Product name	Weight (g)	Package (pcs)
19 142 17	OD02-0705	Terminal shroud for OTL Lite	0,3	25



OTL PEN



Branching connectors can be mounted on DIN rail or with screws (excl. VC05-0243). Connectors can be used especially for grounding appliances in TN-C systems.

OTL PEN -connectors 2xAl/Cu 1,5-240 mm²

DIN-rail / screw mounting

Product documents

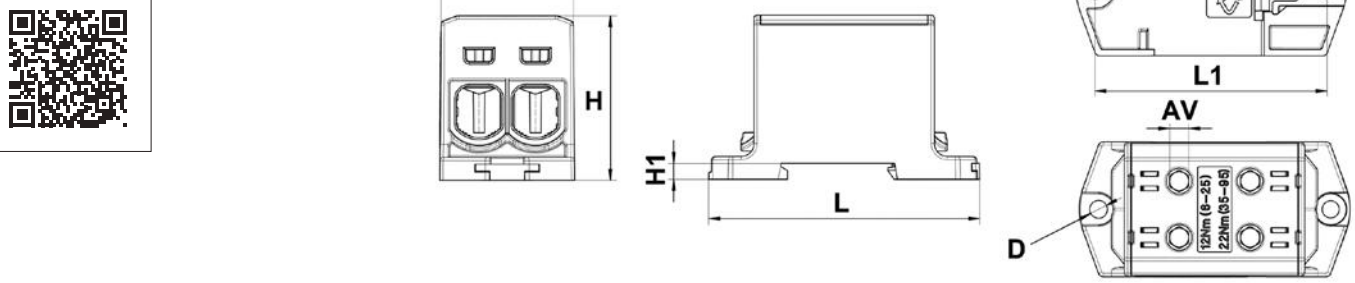

STK code	Product code	Conductor (mm²)	Un (V)	In (A)	Tightening torque	L (mm)	L1 (mm)	H (mm)	H1 (mm)	W (mm)	AV (mm)	D (mm)	Weight (g)	Package (pcs)
19 142 80	VC05-0243	2xAl/Cu 1,5-50	1000	320 (Cu) / 290 (Al)	1,5 Nm (1,5–2,5 mm²), 5 Nm (4-10 mm²), 10 Nm (16-50 mm²)	49	48	43	-	30	5	-	51	15
19 142 81	VC05-0360	2xAl/Cu 6-95	1000	245 (Cu) / 220 (Al)	12 Nm (6-25 mm²), 22 Nm (35-95mm²)	84	72	51	7	42	6	5,5	121	15
19 142 82	VC05-0361	2xAl/Cu 25-150	1000	320 (Cu) / 290 (Al)	14 Nm (25-50 mm²), 30 Nm (70-150 mm²)	84	72	54	7	51	6	5,5	165	5
19 142 83	VC05-0362	2xAl/Cu 35-240	1000	425 (Cu) / 380 (Al)	26 Nm (35-120 mm²), 40 Nm (150-240 mm²)	106	94	65	7	60	8	5,5	335	3

OTL FBB



DIN-rail and screw mounting, branching connector for aluminium and copper conductors. Input with copper busbar.

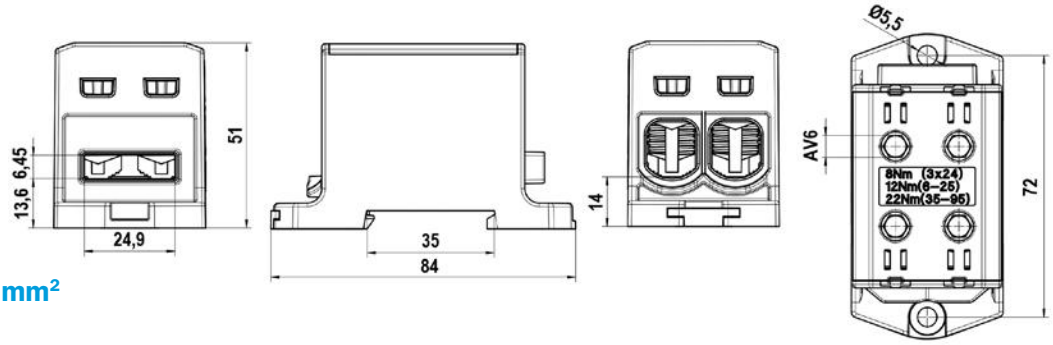

OTL FBB branching connector Al/Cu 6-300 mm²

Screw / DIN-rail mounting



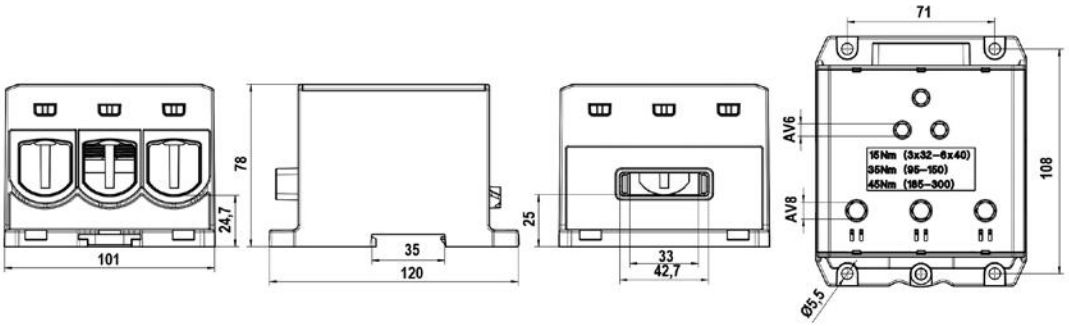

STK Code	Product code	Conductor (mm²)	Busbar	Un (V)	In (A)	Tightening torque	Weight (g)	Package (pcs)
19 143 05	VC05-0387	2xAl/Cu 6-95	3x1x24	1000	245 (Cu) / 220 (Al)	12 Nm (6-25 mm²), 22 Nm (35-95mm²), 8 Nm (busbar)	125	15
19 143 06	VC05-0390	2xAl/Cu 6-95	3x1x24	1000	245 (Cu) / 220 (Al)	12 Nm (6-25 mm²), 22 Nm (35-95mm²), 8 Nm (busbar)	125	15
19 143 07	VC05-0391	2xAl/Cu 6-95	3x1x24	1000	245 (Cu) / 220 (Al)	12 Nm (6-25 mm²), 22 Nm (35-95mm²), 8 Nm (busbar)	125	15
19 143 12	VC05-0386	3xAl/Cu 95-300	3x1x32-6x1x40	1000	630 (Cu) / 630 (Al)	35 Nm (95-150 mm²), 45 Nm (185-300 mm²), 15 Nm (busbar)	680	1
19 143 13	VC05-0394	3xAl/Cu 95-300	3x1x32-6x1x40	1000	630 (Cu) / 630 (Al)	35 Nm (95-150 mm²), 45 Nm (185-300 mm²), 15 Nm (busbar)	680	1
19 143 14	VC05-0395	3xAl/Cu 95-300	3x1x32-6x1x40	1000	630 (Cu) / 630 (Al)	35 Nm (95-150 mm²), 45 Nm (185-300 mm²), 15 Nm (busbar)	680	1

Product documents

Device connectors



General/use: Device connectors are designed to be used with aluminium and copper cables.

Materials: The material of the body and tightening screws is aluminium with tin plating. Plastic cover is made of self-extinguishing polyamide.

Certification and applied regulations:
EN 60947-7-1:2009, EN 61238-1:2003



Product documents



VC06-0002

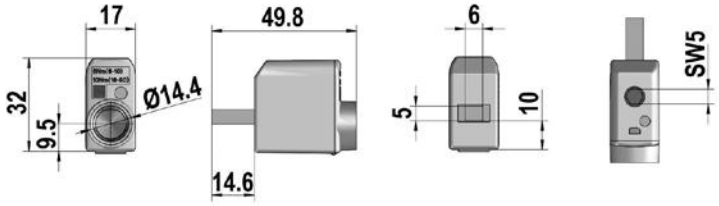

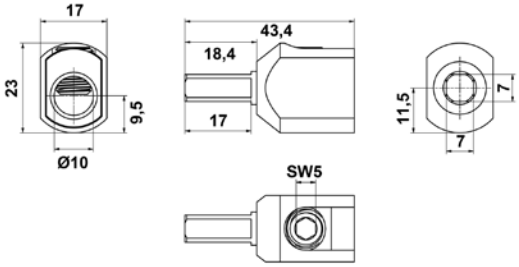

STK code	Product code	Product name*	Busbar type	Conductor (mm²)	Un (V)	In (A)	Tightening torque	Weight (g)	Package (pcs)
19 123 17	VC06-0019	Device connector 50	Standard	1xAl/Cu 6-50	690	160 (Cu)/100 (Al)	6 Nm (6-10 mm²), 10 Nm (16-50 mm²)	22,8	50
19 123 18	VC06-0014	Device connector 50 M	Standard	1xAl/Cu 6-50	690	160 (Cu)/100 (Al)	6 Nm (6-10 mm²), 10 Nm (16-50 mm²)	23,2	50
19 123 80	VC06-0039	Device connector 1xAl/Cu 6-50 L	Left handed	1xAl/Cu 6-50	690	160 (Cu)/100 (Al)	6 Nm (6-10 mm²), 10 Nm (16-50 mm²)	22,8	50
19 123 81	VC06-0038	Device connector 1xAl/Cu 6-50 R	Right handed	1xAl/Cu 6-50	690	160 (Cu)/100 (Al)	6 Nm (6-10 mm²), 10 Nm (16-50 mm²)	22,8	50
19 123 82	VC06-0037	Device connector 1xAl/Cu 6-50 ML	Left handed	1xAl/Cu 6-50	690	160 (Cu)/100 (Al)	6 Nm (6-10 mm²), 10 Nm (16-50 mm²)	23,2	50
19 123 83	VC06-0036	Device connector 1xAl/Cu 6-50 MR	Right handed	1xAl/Cu 6-50	690	160 (Cu)/100 (Al)	6 Nm (6-10 mm²), 10 Nm (16-50 mm²)	23,2	50
52 024 02	VC06-0002	Device connector 1xAl/Cu 50 plug model	Square	1xAl/Cu 2,5-50	690	80 A	3 Nm (2,5-6 mm²), 7,5 Nm (10-50 mm²)	15	50
52 024 03	VC06-0003	Device connector 1xAl/Cu 50 notched plug	Round	1xAl/Cu 2,5-50	690	80 A	3 Nm (2,5-6 mm²), 7,5 Nm (10-50 mm²)	12	50

*Model specific clarifications
M = Model has connector for measurement



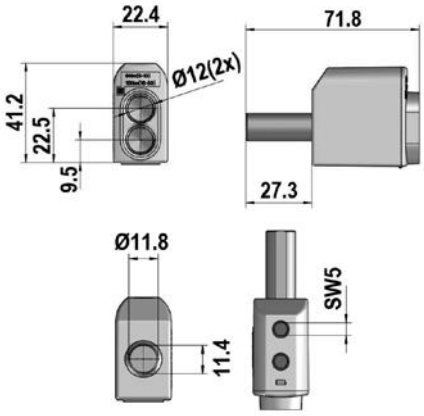

STK code	Product code	Product name*	Busbar type	Conductor (mm²)	Un (V)	In (A)	Tightening torque	Weight (g)	Package (pcs)
19 123 29	VC06-0018	Device connector 2x50 RB	Round bar	2xAl/Cu 6-50	690	320 (Cu)/250 (Al)	6 Nm (6-10 mm²), 10 Nm (16-50 mm²)	26,2	30

Device connectors



Device connector 1xAl/Cu 16-95 mm²

16–95 mm² device connector is available with seven different types of busbar.

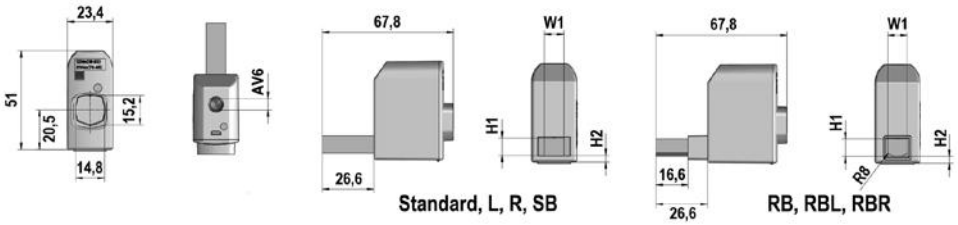

STK code	Product code	Product name*	Busbar type	Conductor (mm²)	Un (V)	In (A)	Tightening torque	W1 (mm)	H1 (mm)	H2 (mm)	Weight (g)	Package (pcs)
19 123 20	VC06-0015	Device connector 1xAl/Cu 16-95 M	Standardi	16-95	690	230 (Cu)/180 (Al)	12 Nm (16-50 mm2), 20 Nm (70-95 mm²)	10	9	3,5	56	30
19 123 22	VC06-0016	Device connector 1xAl/Cu 16-95 RBM	Round bar	16-95	690	230 (Cu)/180 (Al)	12 Nm (16-50 mm2), 20 Nm (70-95 mm²)	10	9	3,5	58	30
19 123 24	VC06-0017	Device connector 1xAl/Cu 16-95 SBM	Screw bar	16-95	690	230 (Cu)/180 (Al)	12 Nm (16-50 mm2), 20 Nm (70-95 mm²)	16	9	3,5	58	30
19 123 19	VC06-0020	Device connector 1xAl/Cu 16-95	Standardi	16-95	690	230 (Cu)/180 (Al)	12 Nm (16-50 mm2), 20 Nm (70-95 mm²)	10	9	3,5	56	30
19 123 21	VC06-0021	Device connector 1xAl/Cu 16-95 RB	Round bar	16-95	690	230 (Cu)/180 (Al)	12 Nm (16-50 mm2), 20 Nm (70-95 mm²)	10	9	3,5	58	30
19 123 23	VC06-0022	Device connector 1xAl/Cu 16-95 SB	Screw bar	16-95	690	230 (Cu)/180 (Al)	12 Nm (16-50 mm2), 20 Nm (70-95 mm²)	16	9	3,5	58	30
19 123 25	VC06-0023	Device connector 1xAl/Cu 16-95 L	Left handed	16-95	690	230 (Cu)/180 (Al)	12 Nm (16-50 mm2), 20 Nm (70-95 mm²)	10	9	3,5	56	30
19 123 26	VC06-0024	Device connector 1xAl/Cu 16-95 R	Right handed	16-95	690	230 (Cu)/180 (Al)	12 Nm (16-50 mm2), 20 Nm (70-95 mm²)	10	9	3,5	56	30
19 123 27	VC06-0025	Device connector 1xAl/Cu 16-95 ML	Left handed	16-95	690	230 (Cu)/180 (Al)	12 Nm (16-50 mm2), 20 Nm (70-95 mm²)	10	9	3,5	56	30
19 123 28	VC06-0026	Device connector 1xAl/Cu 16-95 MR	Right handed	16-95	690	230 (Cu)/180 (Al)	12 Nm (16-50 mm2), 20 Nm (70-95 mm²)	10	9	3,5	56	30
19 123 34	VC06-0028	Device connector 1xAl/Cu 16-95 RBL	Left handed round bar	16-95	690	230 (Cu)/180 (Al)	12 Nm (16-50 mm2), 20 Nm (70-95 mm²)	10	9	3,5	56	30
19 123 35	VC06-0029	Device connector 1xAl/Cu 16-95 RBR	Right handed round bar	16-95	690	230 (Cu)/180 (Al)	12 Nm (16-50 mm2), 20 Nm (70-95 mm²)	10	9	3,5	56	30
19 123 36	VC06-0030	Device connector 1xAl/Cu 16-95 RBMR	Right handed round bar	16-95	690	230 (Cu)/180 (Al)	12 Nm (16-50 mm2), 20 Nm (70-95 mm²)	10	9	3,5	56	30
19 123 37	VC06-0031	Device connector 1xAl/Cu 16-95 RBML	Left handed round bar	16-95	690	230 (Cu)/180 (Al)	12 Nm (16-50 mm2), 20 Nm (70-95 mm²)	10	9	3,5	56	30

*Model specific clarifications
M = Model has connector for measurement

Device connector packages

Device connectors now available in sorted packages. Device connector package includes standard, left- and right-handed connectors. Measure connector option in M-models.



STK code	Product code	Product name	Contents	Package (pcs)
19 123 84	VC06-0040	Device connector package 50 LCR	VC06-0019, VC06-0038, VC06-0039	Acc. to order
19 123 85	VC06-0041	Device connector package 50 LCRM	VC06-0014, VC06-0037, VC06-0036	Acc. to order
19 123 75	VC06-0034	Device connector package 95 LCR	VC06-0020, VC06-0023, VC06-0024	Acc. to order
19 123 76	VC06-0035	Device connector package 95 LCRM	VC06-0015, VC06-0025, VC06-0026	Acc. to order

OJL distribution blocks

General/use: OJL distribution blocks are designed to be used when distributing power to several smaller wires. In all models, one input conductor can be installed, whereas the number of output conductors is six (6), seven (7) or 11 between the connector models. The material of input cable can be aluminium or copper. Output wirings can be only done with copper conductors.

Materials: Bodies of the connectors are made of aluminium and plated with tin. Insulating covers are made of polyamide.

Certification and applied regulations:
EN 60947-7-1:2009, EN 61238-1:2003



Product documents

Certification and product safety

When choosing electrical connector, always make sure to select reliable and safe, certified connector. The requirements for connectors used with copper conductors inside switchgears and similar appliances are specified in standard EN 60947-7-1:2009. All connectors used inside switchgears or similar appliances must fulfil these requirements.

The requirements for connectors designated to be used with aluminium power cables are specified in standard EN 61238-1:2003. Connectors that have been tested and certified in accordance with standard EN 61238-1:2003 are divided into two classes.

- Class A (short circuit tested) - usage examples: feed-in connections, switchgears/appliances, universal
- Class B (not short circuit tested) - usage limited only to special circuits protected by fast-acting fuses

Ouneva OJL-connectors are tested and certified class A connectors, that are compatible with copper and aluminium conductors.

For choosing safe and reliable connector, always make sure that the terminal is equipped with CE and Class A markings with the symbol of certifying institute, for example FI -mark.

OJL distribution blocks

OJL 135

NEW



New OJL distibution block from Ouneva!
Suitable for series connection.

The single pole distribution block OJL 135 for branching connections. Distributes the current through 6 output cables.

Input wirings either 1x Al/Cu 2,5-35 mm² or 1x Al/Cu 2,5-10 mm². Output wirings 4x Cu (2,5-16 mm²), 2x Cu (2,5-10 mm²).

DIN-rail / screw mounting.

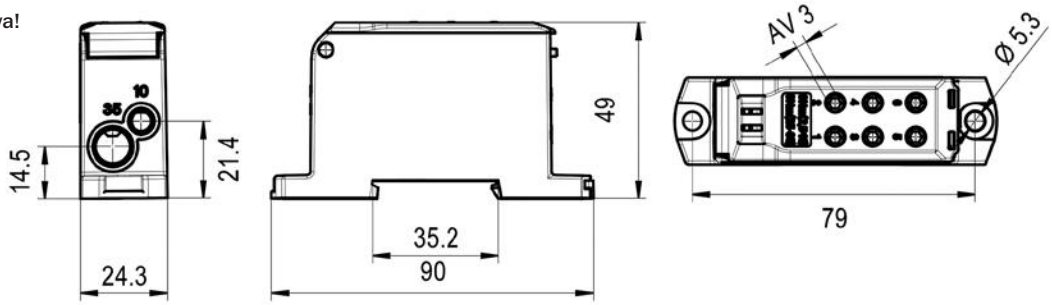

STK code	Product code	Product name*	Input conductor (mm²)	Output conductor (mm²)	Un (V)	In (A) Al/Cu	Tightening torque	Weight (g)	Package (pcs)
19 143 57	VG03-0052	OJL 135 Grey	1xAl/Cu 2,5-35 / 1xAl/Cu 2,5-10	4xCu 2,5-16, 2xCu 2,5-10	1000	120 / 135	3 Nm (2,5-16 mm²), 6 Nm (25-35 mm²)	75	20
19 143 58	VG03-0053	OJL 135 Blue	1xAl/Cu 2,5-35 / 1xAl/Cu 2,5-10	4xCu 2,5-16, 2xCu 2,5-10	1000	120 / 135	3 Nm (2,5-16 mm²), 6 Nm (25-35 mm²)	75	20
19 143 59	VG03-0054	OJL 135 Green	1xAl/Cu 2,5-35 / 1xAl/Cu 2,5-10	4xCu 2,5-16, 2xCu 2,5-10	1000	120 / 135	3 Nm (2,5-16 mm²), 6 Nm (25-35 mm²)	75	20
19 143 60	VG03-0065	OJL 135 Grey PA66	1xAl/Cu 2,5-35 / 1xAl/Cu 2,5-10	4xCu 2,5-16, 2xCu 2,5-10	1000	120 / 135	3 Nm (2,5-16 mm²), 6 Nm (25-35 mm²)	75	20
19 143 61	VG03-0066	OJL 135 Blue PA66	1xAl/Cu 2,5-35 / 1xAl/Cu 2,5-10	4xCu 2,5-16, 2xCu 2,5-10	1000	120 / 135	3 Nm (2,5-16 mm²), 6 Nm (25-35 mm²)	75	20
19 143 62	VG03-0067	OJL 135 Green PA66	1xAl/Cu 2,5-35 / 1xAl/Cu 2,5-10	4xCu 2,5-16, 2xCu 2,5-10	1000	120 / 135	3 Nm (2,5-16 mm²), 6 Nm (25-35 mm²)	75	20

OJL distribution blocks

OJL 200

The single pole distribution block OJL 200 for branching connections. Distributes the current through 6 output cables.

Input wiring 1xAl/Cu (10-70mm²).
Output wirings 6xCu (2,5-16mm²).

DIN-rail / screw mounting.



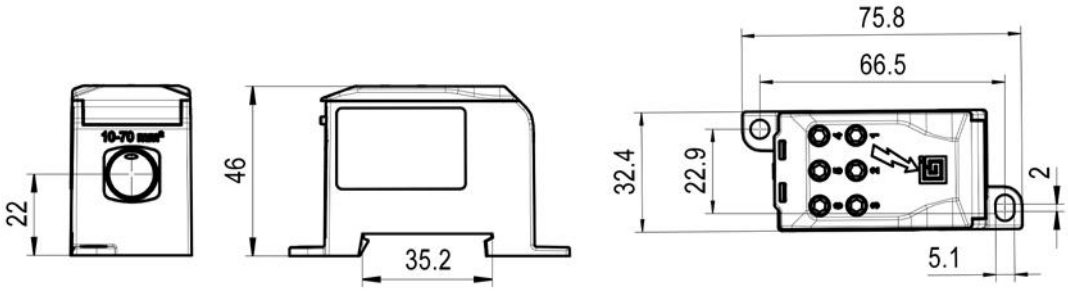

STK code	Product code	Product name*	Input conductor (mm²)	Output conductor (mm²)	Un (V)	In (A) Al/Cu	Tightening torque	Weight (g)	Package (pcs)
19 120 09	VG03-0006	OJL 200 Grey	1xAl/Cu 10-70	6xCu 2,5-16	1000	160 / 200	3 Nm (2,5-16 mm²), 6 Nm (25-35 mm²), 10 Nm (50-70 mm²)	84	24
19 123 90	VG03-0031	OJL 200 Blue	1xAl/Cu 10-70	6xCu 2,5-16	1000	160 / 200	3 Nm (2,5-16 mm²), 6 Nm (25-35 mm²), 10 Nm (50-70 mm²)	84	24
19 123 92	VG03-0032	OJL 200 Green	1xAl/Cu 10-70	6xCu 2,5-16	1000	160 / 200	3 Nm (2,5-16 mm²), 6 Nm (25-35 mm²), 10 Nm (50-70 mm²)	84	24

OJL distribution blocks

OJL 280

The single pole distribution block OJL 280 for branching connections. Distributes the current through 11 output cables.

Input wiring 1xAl/Cu (35-120mm²). Output wirings 2xCu (6-35 mm²), 5xCu (2,5-16mm²) and 4xCu (2,5-10mm²).

DIN-rail / screw mounting.



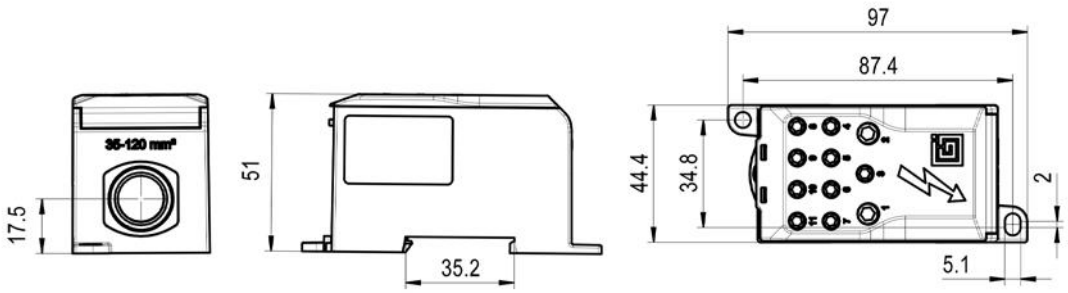

STK code	Product code	Product name*	Input conductor (mm²)	Output conductor (mm²)	Un (V)	In (A) Al/Cu	Tightening torque	Weight (g)	Package (pcs)
19 120 08	VG03-0003	OJL 280 Grey	1xAl/Cu 35-120	2xCu 6-35, 5xCu 2,5-16, 4xCu 2,5-10	1000	250 / 280	3 Nm (2,5-16 mm²), 6 Nm (25-35 mm²), 10 Nm (50-70 mm²), 19 Nm (95-120 mm²)	178	12
19 123 88	VG03-0033	OJL 280 Blue	1xAl/Cu 35-120	2xCu 6-35, 5xCu 2,5-16, 4xCu 2,5-10	1000	250 / 280	3 Nm (2,5-16 mm²), 6 Nm (25-35 mm²), 10 Nm (50-70 mm²), 19 Nm (95-120 mm²)	178	12
19 123 89	VG03-0034	OJL 280 Green	1xAl/Cu 35-120	2xCu 6-35, 5xCu 2,5-16, 4xCu 2,5-10	1000	250 / 280	3 Nm (2,5-16 mm²), 6 Nm (25-35 mm²), 10 Nm (50-70 mm²), 19 Nm (95-120 mm²)	178	12

OJL distribution blocks

OJL 400 C/S

OJL 400 C and CS distribution blocks represent an option input for aluminium or copper cables with cross section range of 95-240mm^2. 400 C S model also include an option for cover sealing. The single pole distribution block OJL 400 C/S for branching connections.

Distributes the current through 7 output cables. Input wiring 1xAl/Cu (95-240 mm^2). Output wirings 3xCu (6-50 mm^2) / 4xCu (2,5-35mm^2)

DIN-rail / screw mounting.



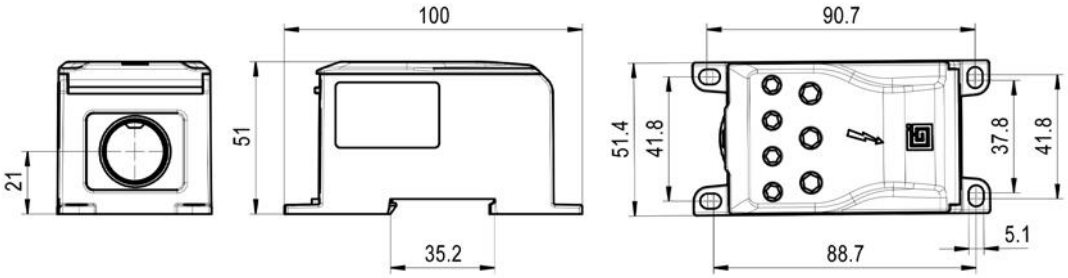

STK code	Product code	Product name*	Input conductor (mm^2)	Output conductor (mm^2)	Un (V)	In (A) Al/Cu	Tightening torque	Weight (g)	Package (pcs)
19 120 93	VG03-0007	OJL 400 C Grey	1xAl/Cu 95-240	4xCu 2,5-35, 3xCu 6-50	1000	380 / 425	6 Nm (2,5-35 mm^2), 10 Nm (50-70 mm^2), 25 Nm (95-240 mm^2)	250	8
19 123 93	VG03-0035	OJL 400 C Blue	1xAl/Cu 95-240	4xCu 2,5-35, 3xCu 6-50	1000	380 / 425	6 Nm (2,5-35 mm^2), 10 Nm (50-70 mm^2), 25 Nm (95-240 mm^2)	250	8
19 123 94	VG03-0036	OJL 400 C Green	1xAl/Cu 95-240	4xCu 2,5-35, 3xCu 6-50	1000	380 / 425	6 Nm (2,5-35 mm^2), 10 Nm (50-70 mm^2), 25 Nm (95-240 mm^2)	250	8
19 120 94	VG03-0008	OJL 400 C S	1xAl/Cu 95-240	4xCu 2,5-35, 3xCu 6-50	1000	380 / 425	6 Nm (2,5-35 mm^2), 10 Nm (50-70 mm^2), 25 Nm (95-240 mm^2)	250	8

*Clarification for model name: S = " Sealing", model can be sealed

OJL distribution blocks

OJL 400 FBB/FBB S

OJL 400 FBB and FBB S distribution blocks represent an option for using flexible busbar as input. 400 FBB S and C S models also include an option for cover sealing. The single pole distribution block OJL 400 FBB for branching connections.

Distributes the current through 7 output cables. Input busbar Cu 10x(1x24). Output wirings 3xCu (6-50 mm^2) / 4xCu (2,5-35mm^2)

DIN-rail / screw mounting.



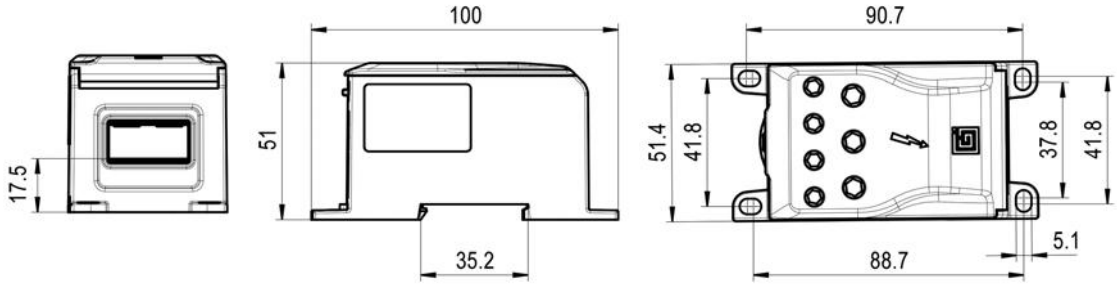

STK code	Product code	Product name*	Input conductor (mm^2)	Output conductor (mm^2)	Un (V)	In (A) Al/Cu	Tightening torque	Weight (g)	Package (pcs)
19 120 95	VG03-0009	OJL 400 FBB Grey	Flexible busbar Cu 10x(1x24)	4xCu 2,5-35, 3xCu 6-50	1000	380 / 425	6 Nm (busbar), 6 Nm (2,5-35 mm^2), 10 Nm (6-50 mm^2)	247	8
19 123 95	VG03-0037	OJL 400 FBB Blue	Flexible busbar Cu 10x(1x24)	4xCu 2,5-35, 3xCu 6-50	1000	380 / 425	6 Nm (busbar), 6 Nm (2,5-35 mm^2), 10 Nm (6-50 mm^2)	247	8
19 123 96	VG03-0038	OJL 400 FBB Green	Flexible busbar Cu 10x(1x24)	4xCu 2,5-35, 3xCu 6-50	1000	380 / 425	6 Nm (busbar), 6 Nm (2,5-35 mm^2), 10 Nm (6-50 mm^2)	247	8
19 120 96	VG03-0010	OJL 400 FBB S	Flexible busbar Cu 10x(1x24)	4xCu 2,5-35, 3xCu 6-50	1000	380 / 425	6 Nm (busbar), 6 Nm (2,5-35 mm^2), 10 Nm (6-50 mm^2)	247	8

*Clarification for model name: S = " Sealing", model can be sealed

OJL busbar adapters

General/use: OJL busbar adapters are used for connecting OJL connectors to copper or aluminium busbars.

Materials: Tin plated copper

STK code	Product code	Product name	D (mm)	H (mm)	H1 (mm)	L (mm)	L1 (mm)	W (mm)	W1 (mm)	W2 (mm)	Weight (g)	Package (pcs)
191 23 97	VG03-0030	Busbar adapter OJL 200	9,8	5,95	4,8	45	14	14	6,8	11,9	22	10
19 123 98	VG03-0029	Busbar adapter OJL 280	13,8	7,25	5	61	35	23	10,8	14,5	49	10
191 23 99	VG03-0028	Busbar adapter OJL 400 C	13,8	9,75	5,2	70	40	30	10,8	19,5	90	10



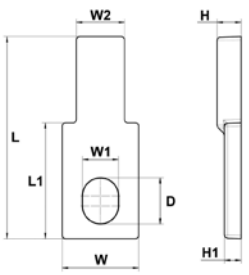

Terminal plate

General/use: Terminal plate is designed for connecting copper cables. Product is equipped with fastening snaps for insulating cover (available separately). Terminal plate can be mounted on DIN rail or with screws.

Materials: Connector parts are made of zinc plated steel and the insulating base is made of polyamide.

Certification and applied regulations:
EN 60947-7-1:2009

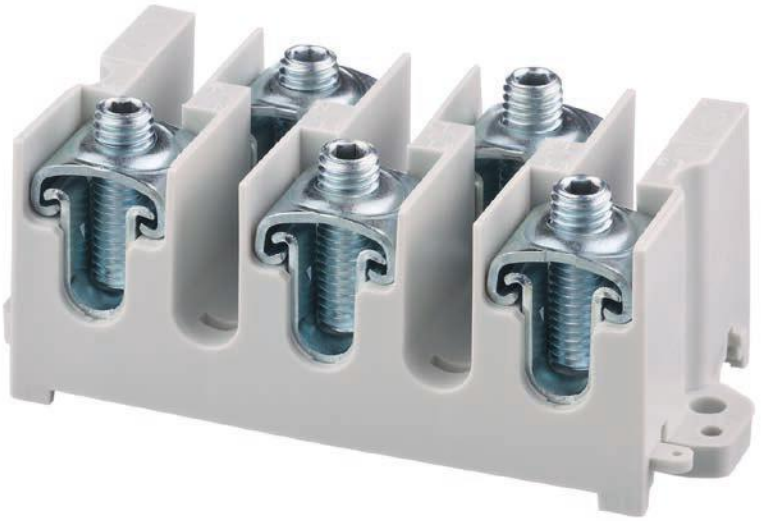

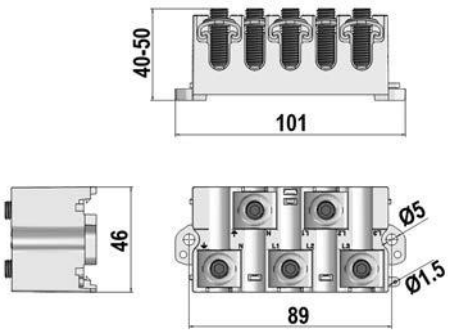

Product documents

Maximum number of conductors per one connection point.

Conductor (mm^2)	Conductors max (No.)	Tightening torque
Cu 2,5	8	3 Nm
Cu 4	6	3 Nm
Cu 6	6	3 Nm
Cu 10	4	5 Nm
Cu 16	2	5 Nm

STK code	Product code	Conductor (mm^2)	Un (V)	In (A)	Tightening torque	Weight (g)	Package (pcs)
19 141 47	VG01-0019	5xCu 2,5-16	690	124	3 Nm (2,5-6 mm^2), 5 Nm (10-16 mm^2)	145	50

Insulating cover

General/use: Insulating cover for terminal plate (IP20). Cover can be sealed to terminal plate.

Materials: Polycarbonate

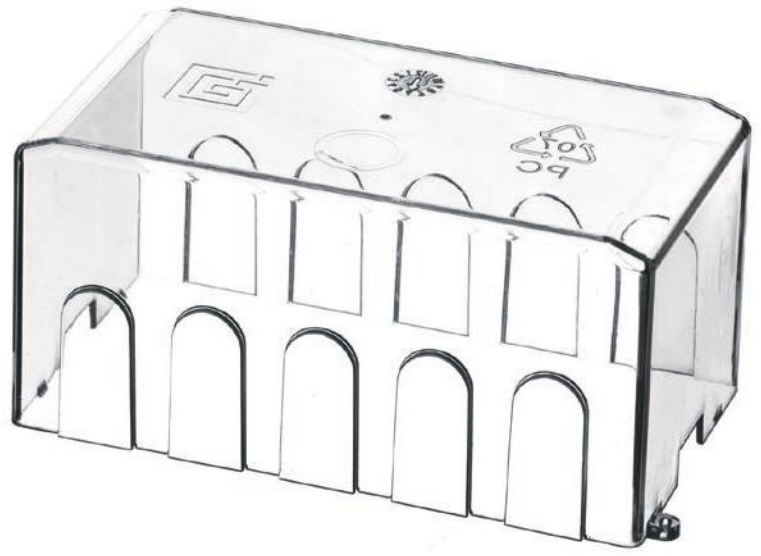

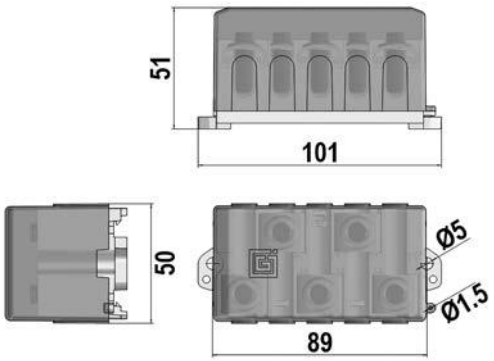

STK code	Product code	Type	Weight (g)	Package (pcs)
19 141 47	OD02-0002	Compatible with VG01-0019	18	50

Branching blocks



VG02-0001



VG02-0002



VG02-0003



VG02-0004



VG02-0005



VG02-0006

General/use: Ouneva distribution blocks are designed to be used when connecting and branching copper cables. All models can be mounted on DIN rail or with screws.

Materials:
Insulating base: Polyamide
Connection parts: Zinc plated steel and tin plated copper

Certification and applied regulations:
EN 60947-7-1:2009

STK code	Product code	Conductor (mm^2)	Un (V)	In (A)	Tightening torque	Weight (g)	Package (pcs)
19 141 78	VG02-0001	Cu 2,5-70 + bracket 6-70	750	270	3 Nm (2,5-70 mm^2)	145	15
19 141 79	VG02-0002	Cu 2,5-70	750	270	3 Nm (2,5-70 mm^2)	101	15
19 141 80	VG02-0003	Cu 35-240	750	560	12 Nm (35-240 mm^2)	250	15
19 141 81	VG02-0004	Cu 35-240 + bracket 16-185	750	560/365	12 Nm (16-240 mm^2)	364	10
19 141 82	VG02-0005	Cu 35-150	750	400	15 Nm (35-150 mm^2)	173	15
19 141 83	VG02-0006	Cu 35-150 + bracket 16-150	750	320	15 Nm (16-150 mm^2)	289	10

Copper plates

Plates are made of copper. Copper plates are used between conductors when connecting several different sizes of wires to branching block.

STK code	Product code	Product name	Compatibility	Weight (g)	Package (pcs)
19 120 41	KG02-0012	Cu-plate 6-70	VG02-0001 and VG02-0002	6	100
19 120 53	KG02-0013	Cu-plate 35-240	VG02-0003 and VG02-0004	13	100

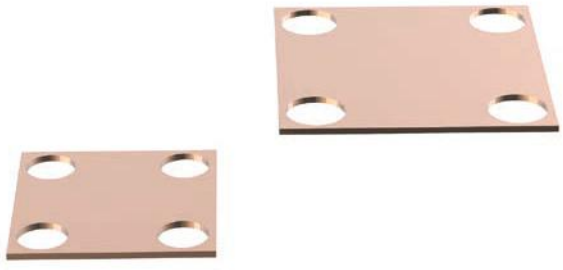

Side covers

Side covers are made of plastic. Covers are used to protect wires and insulate phases from each other.

STK code	Product code	Product name	Compatibility	Weight (g)	Package (pcs)
19 120 54	OD02-0508	Side cover 6-70	VG02-0001 and VG02-0002	13	100
19 120 56	OD02-0511	Side cover 35-240	VG02-0003, VG02-0004, VG02-0005 and VG02-0006	30	100



Product documents

Pole branching connector

General/use: Pole branching connectors are designed to be used with both aluminium and copper cables. Several different connector kits available. Ask for more information from Ouneva sales. Connectors have from four to nine branching conductor inputs. IP23 can be achieved with adequate sized conductor in each slot. Sealing kit is available as accessory for IP33 sealing.



Materials: The material of the body and tightening screws is aluminium with tin plating. Plastic cover is made of polyamide.

Certification and applied regulations:
EN 60947-7-1:2009, EN 61238-1:2003;
EN 60529:1991 + A1:2000 + A2:2013

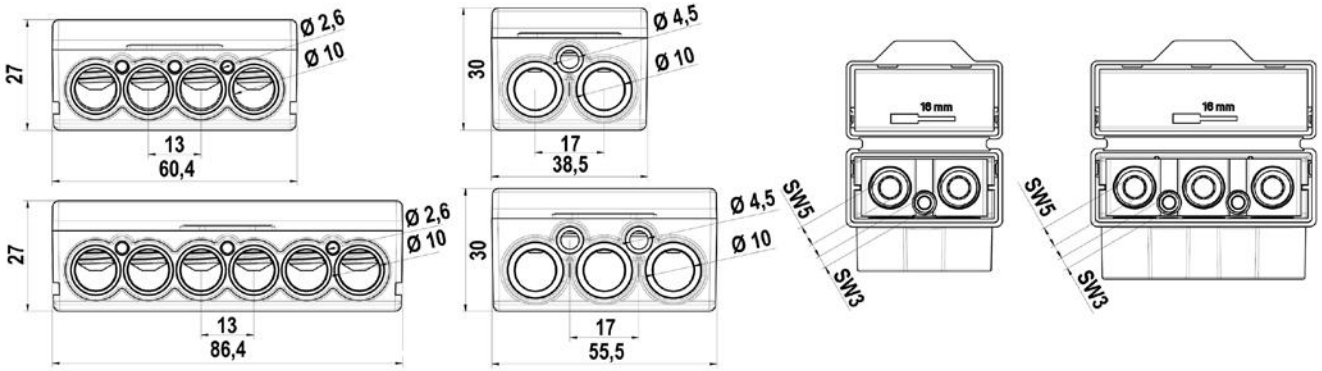

STK code	Product code	Color	Conductor (mm²)	Un (V)	In (A) Cu / Al	Tightening torque	Weight (g)	Package (pcs)
19 142 84	VC02-0072	Grey	Al 2x50 / Cu 2x35+1x1,5-6	1000	135/145	2 Nm (1,5-6 mm² LED, 3 Nm (2,5-16 mm²), 8 Nm (25-50 mm²)	33	18
19 142 00	VC02-0026	Grey	Al 4x50 / Cu 4x35	1000	135/145	3 Nm (2,5-16 mm²), 8 Nm (25-50 mm²)	42	18
19 142 01	VC02-0027	Grey	Al 6x50 / Cu 6x35	1000	135/145	3 Nm (2,5-16 mm²), 8 Nm (25-50 mm²)	61	6
19 142 02	VC02-0039	Grey	Al 4x50 / Cu 4x35+3x1,5-2,5	1000	135/145	1 Nm (1,5-2,5 mm² LED, 3 Nm (2,5-16 mm²), 8 Nm (25-50 mm²)	46	18
19 142 03	VC02-0038	Grey	Al 6x50 / Cu 6x35+3x1,5-2,5	1000	135/145	1 Nm (1,5-2,5 mm² LED, 3 Nm (2,5-16 mm²), 8 Nm (25-50 mm²)	70	6
19 143 31	VC02-0111	Grey	Al 3×50 / Cu 3×35 + 2×1,5-6	1000	135/145	2 Nm (1,5-6 mm² LED, 3 Nm (2,5-16 mm²), 8 Nm (25-50 mm²)	49	18
19 142 85	VC02-0075	Blue	Al 2x50 / Cu 2x35+1x1,5-6	1000	135/145	2 Nm (1,5-6 mm² LED, 3 Nm (2,5-16 mm²), 8 Nm (25-50 mm²)	33	18
19 142 04	VC02-0040	Blue	Al 4x50 / Cu 4x35	1000	135/145	3 Nm (2,5-16 mm²), 8 Nm (25-50 mm²)	42	18
19 142 05	VC02-0042	Blue	Al 6x50 / Cu 6x35	1000	135/145	3 Nm (2,5-16 mm²), 8 Nm (25-50 mm²)	61	6
19 142 06	VC02-0041	Blue	Al 4x50 / Cu 4x35+3x1,5-2,5	1000	135/145	1 Nm (1,5-2,5 mm² LED, 3 Nm (2,5-16 mm²), 8 Nm (25-50 mm²)	46	18
19 142 07	VC02-0043	Blue	Al 6x50 / Cu 6x35+3x1,5-2,5	1000	135/145	1 Nm (1,5-2,5 mm² LED, 3 Nm (2,5-16 mm²), 8 Nm (25-50 mm²)	70	6
19 143 32	VC02-0112	Blue	Al 3×50 / Cu 3×35 + 2×1,5-6	1000	135/145	2 Nm (1,5-6 mm² LED, 3 Nm (2,5-16 mm²), 8 Nm (25-50 mm²)	49	18
19 142 86	VC02-0076	Yellow / Green	Al 2x50 / Cu 2x35+1x1,5-6	1000	135/145	2 Nm (1,5-6 mm² LED, 3 Nm (2,5-16 mm²), 8 Nm (25-50 mm²)	33	18
19 142 27	VC02-0057	Yellow / Green	Al 4x50 / Cu 4x35	1000	135/145	3 Nm (2,5-16 mm²), 8 Nm (25-50 mm²)	42	18
19 142 28	VC02-0058	Yellow / Green	Al 6x50 / Cu 6x35	1000	135/145	3 Nm (2,5-16 mm²), 8 Nm (25-50 mm²)	61	6
19 142 29	VC02-0055	Yellow / Green	Al 4x50 / Cu 4x35+3x1,5-2,5	1000	135/145	1 Nm (1,5-2,5 mm² LED, 3 Nm (2,5-16 mm²), 8 Nm (25-50 mm²)	46	18
19 142 30	VC02-0059	Yellow / Green	Al 6x50 / Cu 6x35+3x1,5-2,5	1000	135/145	1 Nm (1,5-2,5 mm² LED, 3 Nm (2,5-16 mm²), 8 Nm (25-50 mm²)	70	6
19 143 33	VC02-0113	Yellow / Green	Al 3×50 / Cu 3×35 + 2×1,5-6	1000	135/145	2 Nm (1,5-6 mm² LED, 3 Nm (2,5-16 mm²), 8 Nm (25-50 mm²)	49	18

Product documents

Pole branching connector kits

General: Connector package includes LED connectors for connecting 4 or 5 cabled pole systems, 350 mm / 16 mm² grounding cable with PK 16-6H fork cable shoe and 350 mm / 2,5 mm² black connector cable and fuse with base (excl. VC02-0071).

Use: Pole branching connector kit can be used with copper and aluminium cables. Kit is designed especially for lightning pole connections.

Materials: The material of the body and tightening screws is aluminium with tin plating. Plastic cover is made of polyamide.

Certification and applied regulations:
EN 60947-7-1:2009, EN 61238-1:2003;
EN 60529:1991 + A1:2000 + A2:2013

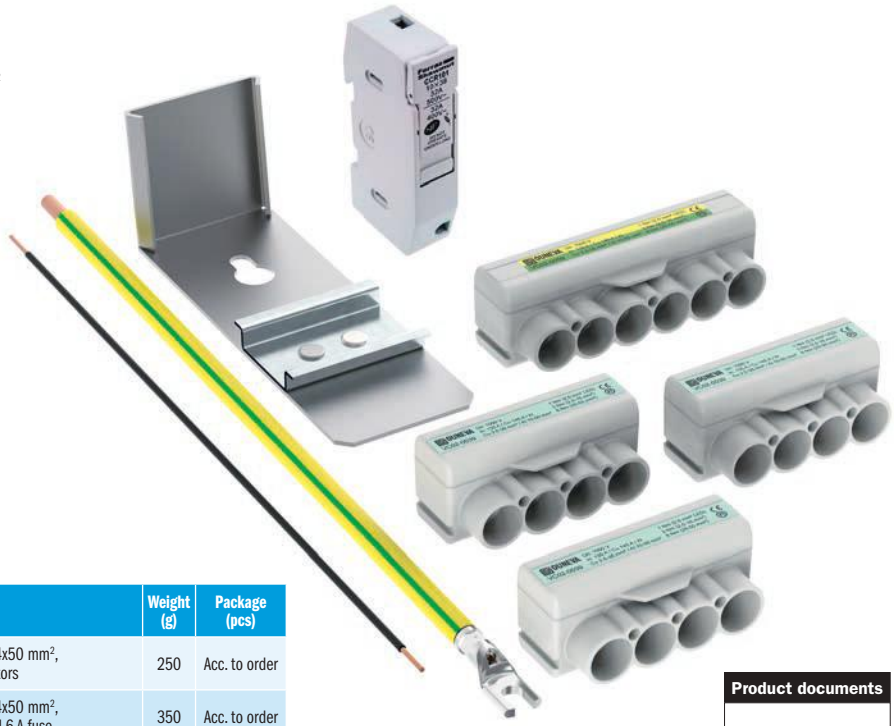

STK code	Product code	Type	Weight (g)	Package (pcs)
19 142 77	VC02-0071	Pole branching connector kit 3x 4x50 mm², 1x 6x50 mm² with conductors	250	Acc. to order
19 142 92	VC02-0085	Pole branching connector kit 3x 4x50 mm², 1x 6x50 mm² with fuse base and 6 A fuse	350	Acc. to order
19 142 73	VC02-0069	Pole branching connector kit 3x 4x50 mm², 1x 6x50 mm² with fuse base and 10 A fuse	350	Acc. to order
19 143 30	VC02-0115	Pole branching connector kit 5x 4x50 mm² with fuse base and 6 A fuse	372	Acc. to order
19 143 29	VC02-0114	Pole branching connector kit 5x 4x50 mm² with fuse base and 10 A fuse	372	Acc. to order
19 143 04	VC02-0092	Pole branching connector kit 3x 4x50 mm², 1x 6x50 mm² with fuse base, 6 A fuse and phase markings	350	Acc. to order
19 143 03	VC02-0093	Pole branching connector kit 3x 4x50 mm², 1x 6x50 mm² with fuse base, 10 A fuse and phase markings	350	Acc. to order

Product documents

Pole branching connector sealing kit

Materials: EPDM

STK code	Product code	Weight (g)	Package (pcs)
19 142 65	0D01-0071	5	3



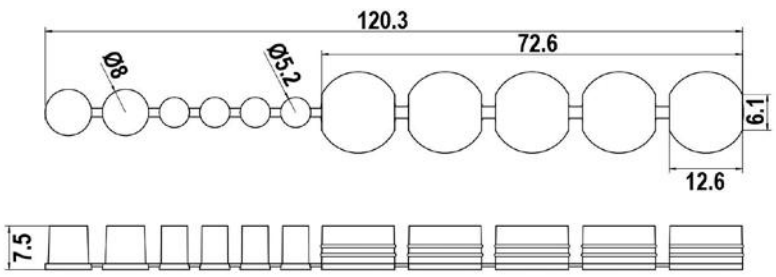

Universal branching connectors

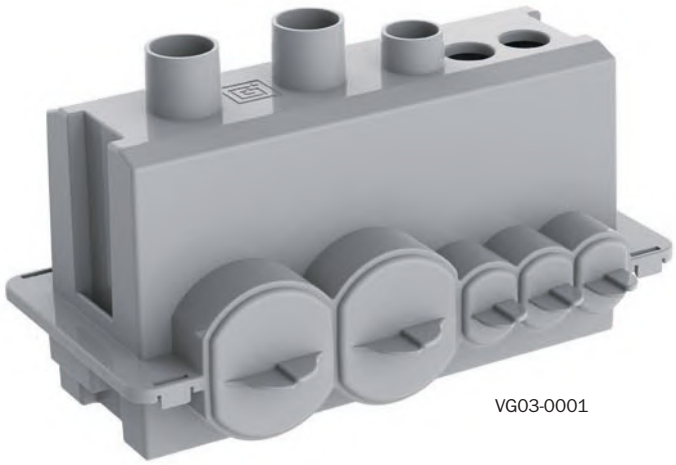

VG03-0001

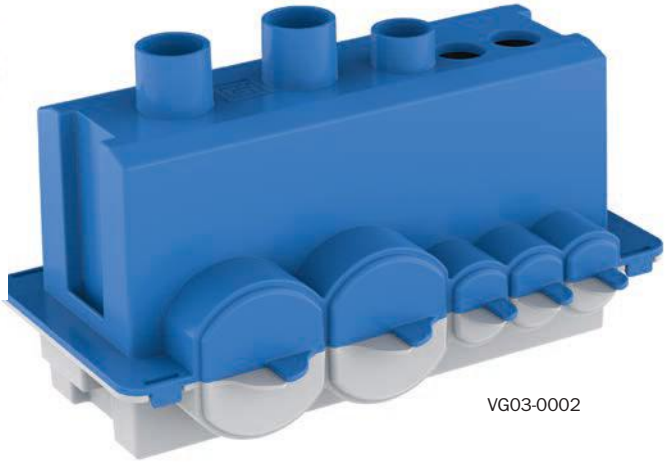

VG03-0002

General/use: Branching connectors are designed to be used with both aluminium and copper cables in indoor and outdoor appliances. Insulated connector can be installed to the circuit with voltage on. Protection class IP 20.

Materials:
Connector housing: Polyamide
Connection parts: Tin plated aluminium

Certification and applied regulations:
EN 60947-7-1:2009

Product documents

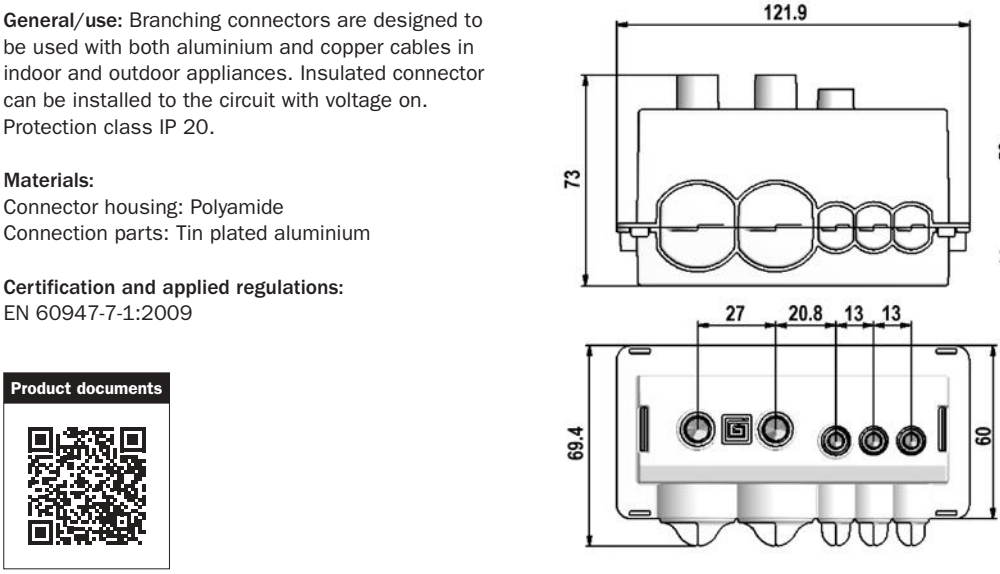

STK code	Product code	Color	Conductor (mm^2)	Un (V)	In (A) Cu/Al	Tightening torque	Weight (g)	Package (pcs)
19 141 48	VG03-0001	Grey	Al/Cu 2x(70-240)+3x(16-50)	1000	425/380	10 Nm (16-50 mm^2), 24 Nm (70-150 mm^2), 38 Nm (185-240 mm^2)	132	20
19 141 77	VG03-0002	Blue	Al/Cu 2x(70-240)+3x(16-50)	1000	425/380	10 Nm (16-50 mm^2), 24 Nm (70-150 mm^2), 38 Nm (185-240 mm^2)	132	20

Grounding ball studs

General/use: Grounding ball studs for safety grounding appliances.

Materials: Tin plated copper

Certification and applied regulations: IEC/EN 61230 (5.7)



Product documents



VI03-0004

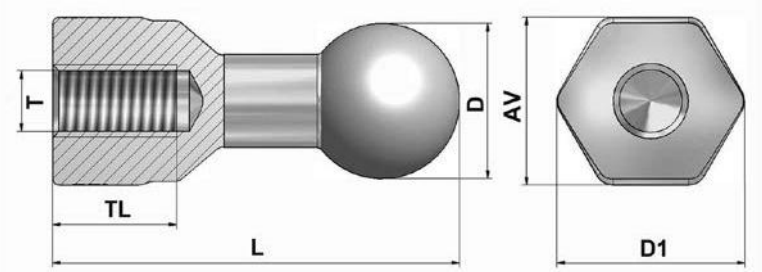

STK code	Product code	Type	T	TL (mm)	AV (mm)	D (mm)	D1 (mm)	L (mm)	Max short-circuit current	Weight (g)	Package (pcs)
64 360 08	VI03-0010	20 mm ball / M12 screw hole	M12	16	27	20	27	58,6	23,7 kA/1s	178	20
64 360 09	VI03-0011	25 mm ball / M12 screw hole	M12	20	27	25	30	65,6	29,6 kA/1s	208	20
64 360 10	VI03-0012	30 mm ball / M12 screw hole	M12	20	27	30	30	71,1	29,6 kA/1s	262	20
64 146 07	VI03-0004	30 mm ball / M16 / 30° bend	M16	24	27	30	30	91	25 kA/1s	344	10

Assemblies

Assemblies include grounding ball stud, stainless steel adapter, washer and nut for fastening.

STK code	Product code	Type	Weight (g)	Package (pcs)
64 360 25	VI03-0025	20 mm ball + M12 adapter	245	20
64 360 26	VI03-0026	25 mm ball + M16 adapter	305	20
64 360 27	VI03-0027	25 mm ball + M12 adapter	275	20
64 360 28	VI03-0028	30 mm ball + M12 adapter	329	20



VI03-0025, 0026, 0027, 0028

Adapters

Adapter M12 is compatible with M12 -threaded grounding ball stud models. Product is made of steel and plated with zinc.

STK code	Product code	Type	Weight (g)	Package (pcs)
64 360 11	VK01-0001	Screw adapter M12-M12	53	20

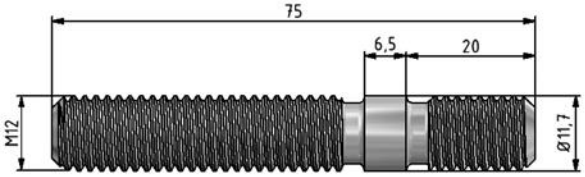

Product documents



PEN-connectors

General/use: PEN-connector, TN-C (PEN) system can be transferred into TN-S (PE+N) system by removing connector block. Terminal is designed to be used with both copper and aluminium cables. All connectors are equipped with two terminals for test leads. Connectors are screw mounted.

Product documents

Materials:
Connector housing:
Polyamide
Connection parts:
Tin plated aluminium

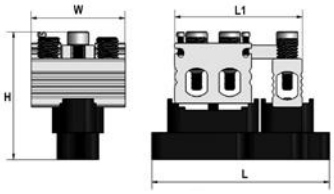



STK code	Product code	Product name	Conductor (mm²)	Un (V)	L (mm)	L1 (mm)	L2 (mm)	H (mm)	W (mm)	W1 (mm)	AV (mm)	D (mm)	Tightening torque (Nm) - Conductors	Tightening torque (Nm) - Test leads	Weight (g)	Package (pcs)
19 120 40	VI02-0001	OT-PEN 50	6xAl/Cu 1,5-50	690	83	60	76	57	44	5,25	5	4	1,5 Nm (1,5-2,5 mm²), 5 Nm (4-16 mm²), 10 Nm (25-50 mm²)	3,5 Nm (1,5-4 mm²)	174	9
19 120 34	VI02-0002	OT-PEN 95	6xAl/Cu 6-95	690	83	63,5	76	80	64	5,25	5	4	5 Nm (6-16 mm²), 22 Nm (25-95 mm²)	3,5 Nm (1,5-4 mm²)	356	9
19 120 35	VI02-0003	OT-PEN 120	6xAl/Cu 16-120	690	120	81,5	104	87	64	21	6	6	5 Nm (16 mm²), 26 Nm (25-120 mm²)	3,5 Nm (1,5-4 mm²)	573	5
19 120 36	VI02-0004	OT-PEN 150	6xAl/Cu 25-150	690	120	82	104	91	64	21	6	6	14 Nm (25-50 mm²), 30 Nm (70-150 mm²)	3,5 Nm (1,5-4 mm²)	605	5
19 120 37	VI02-0005	OT-PEN 240	6xAl/Cu 35-240	690	134,9	104,5	119	101,6	64	21	8	6	26 Nm (35-120 mm²), 40 Nm (150-240 mm²)	3,5 Nm (1,5-4 mm²)	813	5

Flexible PEN-connector

Flexible PEN-connector is designed to be installed in busbar connecting N- and PE-conductors. Connector is used in situations where flexibility makes the installation easier.

Product documents



STK code	Product code	Product name	Conductor (mm²)	Weight (g)	Package (pcs)
54 080 00	VI01-0006	Flexible OL-PEN 2x(6-70)	2xAl/Cu 6-70	307	10

Potential equalizer busbars

General/use: Potential equalizer busbars are used when connecting or assembling potential-equalizing cables. Busbars are mounted by screws.

Materials: Bodies and tightening screws of busbars are made of aluminium and plated with tin. Busbar supports are made of self-extinguishing polyamide.

Product documents



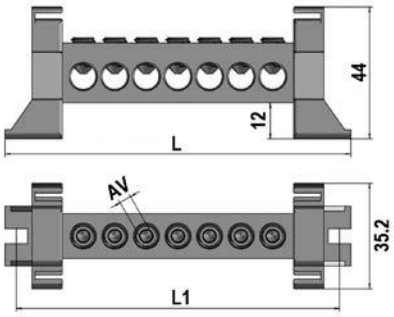

STK code	Product code	Conductor (mm²)	Un (V)	L (mm)	L1 (mm)	AV (mm)	Tightening torque	Weight (g)	Package (pcs)
19 121 27	VE04-0001	5xAl/Cu 6-50	690	108,5	101	5	7 Nm (6-16 mm²), 14 Nm (25-50 mm²)	69	5
19 121 28	VE04-0002	2xAl/Cu 6-70 + 8xAl/CU 6-50	690	180	172,5	5	7 Nm (6-16 mm²), 14 Nm (25-70 mm²)	107	5
19 142 66	VE04-0007	7xAl/Cu 25	690	115	107,5	4	3 Nm (1,5-6 mm²), 6 Nm (10-25 mm²)	73	5
19 142 67	VE04-0008	14xAl/Cu 25	690	190	182,5	4	3 Nm (1,5-6 mm²), 6 Nm (10-25 mm²)	113	5

Modular N/PE busbars

Ouneva N/PE-busbars are used in switchgears and other systems for neutral and safety grounding. Construction of busbar system is modular and allows client to order special configurations.

Quadrangular busbar (5x5 mm Cu) is compatible with 6 mm², 16 mm², 35 mm² connectors. Busbar supports are made of grey nylon.

Supports can be mounted with screws or DIN-rail. Nominal voltage of the systems is 600 V.

Ask for a specific assembly to meet your requirements!



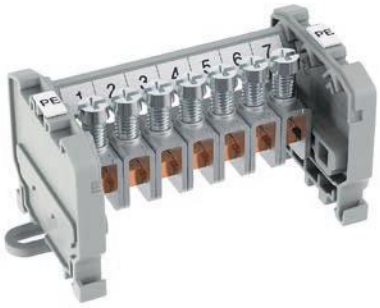

Product documents



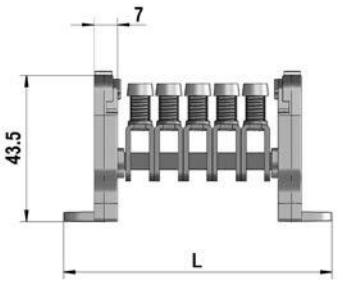

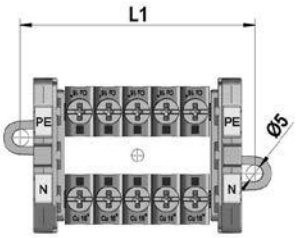

N/PE-Busbars

STK code	Product code	Type	L (mm)	L1 (mm)	Installation	Weight (g)	Package (pcs)
19 142 54	VI05-0178	N/PE K2 5x5 (2x 0,75-16 / 12x 0,75-6 mm²)	126	116	Screw	211	8
19 142 55	VI05-0179	N/PE K2 5x5 (2x 0,75-16 / 22x 0,75-6 mm²)	186	176	Screw	330	8
19 142 56	VI05-0180	N/PE K2 5x5 (2x 0,75-16 / 32x 0,75-6 mm²)	246	236	Screw	455	5
19 142 57	VI05-0181	N/PE K2 5x5 (5x 0,75-16 mm²)	80	70	Screw	116	10
19 142 58	VI05-0182	PE K1 5x5 (7x 0,75-16 mm²)	97	87	Screw	86	10

N/PE-busbars includes busbars, end supports, connectors and potential markinkgs. Marking supports, finger guards and marking charts are available separately as accessory.

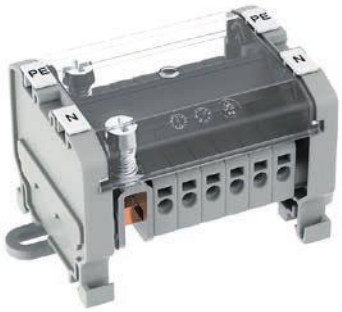

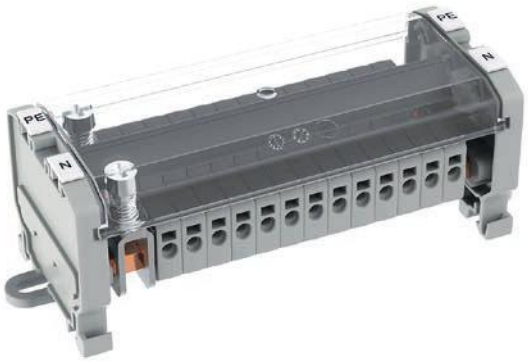

N/PE-push in assemblies

STK code	Product code	Type	L (mm)	L1 (mm)	Installation	Weight (g)	Package (pcs)
19 142 87	VI05-0184	N/PE K2 5x5 (1x 0,75-16 / 6x 1,5-4 mm²)	80	70	Screw/Push-in	81	10
19 142 88	VI05-0183	N/PE K2 5x5 (1x 0,75-16 / 13x 1,5-4 mm²)	126	116	Screw/Push-in	97	8

Assemblies include connectors, busbars, end supports, marking supports and fingerguards.

Modular N/PE busbars

Connector



STK code	Product code	Type	H (mm)	H1 (mm)	B (mm)	L (mm)	Weight (g)	Package (pcs)
19 142 19	VI06-0141	Cu 16 mm² 5x5 (Pozidriv)	29,1	18	14,8	8,5	7	100
19 142 20	VI06-0137	Cu 0,75-6 mm² 6x6 (Pozidriv)	26,7	17	14,8	5,9	5	500
19 142 21	VI06-0138	Cu 0,75-16 mm² 6x6 (Pozidriv)	29,1	18	14,8	8,5	8	500
19 142 22	VI06-0139	Cu 2,5-35 mm² 6x6 (M10x12, hex key DIN 913)	24,7	20,6	17,8	12,6	14	200
19 142 23	VI06-0140	Cu 2,5-35 mm² 6x6 (Pozidriv)	26,4	20,6	17,8	12,6	14	200
19 142 24	VI06-0144	Cu 2,5-35 mm² 5x5 (Pozidriv)	26,4	20,6	17,8	12,6	14	200
19 142 25	VI06-0142	Cu 0,75-6 mm² 5x5 (Pozidriv)	26,7	17	14,8	5,9	5	100
19 142 26	VI06-0143	Cu 2,5-35 mm² 5x5 (M10x12, hex key DIN 913)	26,4	20,6	17,8	12,6	14	100
★ 19 143 56	VI06-0165	Cu 2,5-35 mm² 5x5/3x12 (M10x12, hex key DIN 913)	29,5	20,6	17,8	12,6	14	100

Push-in connectors

STK code	Product code	Type	Weight (g)	Package (pcs)
19 142 76	VI06-0145	Cu 0,75-4 mm² for 3x10 busbar	1	100
19 142 75	VI06-0146	Cu 0,75-4 mm² for 6x6 busbar	1	100
19 142 74	VI06-0147	Cu 0,75-4 mm² for 5x5 busbar	1	100



Busbars

STK code	Product code	Type	Length (mm)	Weight (g)	Package (pcs)
19 142 44	KI05-0079	5x5	59	14	50
19 142 45	KI05-0080	5x5	77	17	40
19 142 46	KI05-0081	5x5	106	23	40
19 142 47	KI05-0082	5x5	166	37	30
19 142 48	KI05-0083	5x5	226	50	20
19 121 92	VI06-0112	5x5	1000	179	10
19 142 68	KI05-0087	6x6	1000	283	10
19 142 69	KI05-0088	3x10	1000	236	10

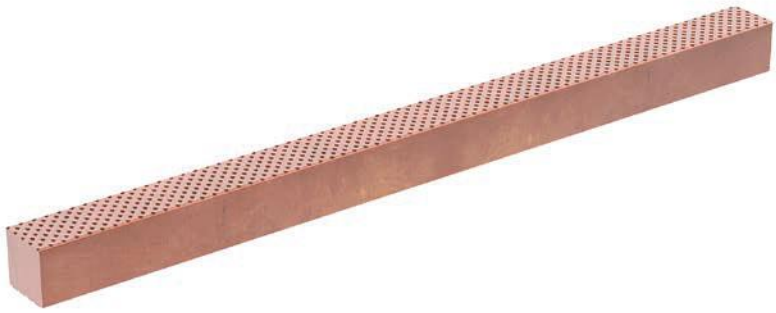

Busbars are available with multiple lengths

★ = NEW

Modular N/PE busbars

End supports

STK code	Product code	Type	Compabilitiy	Weight (g)	Package (pcs)
19 142 36	0D02-0724	K1/K2 3x10	VI05-0181	17	100
19 142 37	0D02-0725	K1/K2 5x5	VI05-0182	17	100
19 142 38	0D02-0727	K1/K2 6x6	VI05-0178	18	100



Marking supports

STK code	Product code	Length (mm)	Compatibility	Weight (g)	Package (pcs)
19 142 39	0D02-0733	50	VI05-0181	1	25
19 142 40	0D02-0734	67	VI05-0182	2	20
19 142 41	0D02-0735	97	VI05-0178	3	20
19 142 42	0D02-0736	156	VI05-0179	5	15
19 142 43	0D02-0737	216	VI05-0180	7	10



Finger guards

STK code	Product code	Length (mm)	Compatibility	Weight (g)	Package (pcs)
19 142 31	0D02-0728	54	VI05-0181	6	25
19 142 32	0D02-0729	71	VI05-0182	8	20
19 142 33	0D02-0730	100	VI05-0178	11	20
19 142 34	0D02-0731	160	VI05-0179	18	15
19 142 35	0D02-0732	220	VI05-0180	28	10



Marking charts

STK code	Product code	Type	Weight (g)	Package (pcs)
19 142 59	0E04-0636	No. 1-25, for 6 mm² connector	3	Acc. to order
19 142 60	0E04-0637	No. 26-50, for 6 mm² connector	3	Acc. to order
19 142 61	0E04-0638	No. 1-16, for 16 mm² connector	3	Acc. to order
19 142 62	0E04-0639	No. 17-32, for 16 mm² connector	3	Acc. to order
19 142 63	0E04-0640	No. 1-10, for 35 mm² connector	3	Acc. to order

Includes ten rows of stickers



Grounding busbars

Grounding busbars are manufactured of pure unplated copper. Busbars can be used for safety grounding in different circumstances. Connections are numbered by stamping. Insulator and fastening set are available separately.

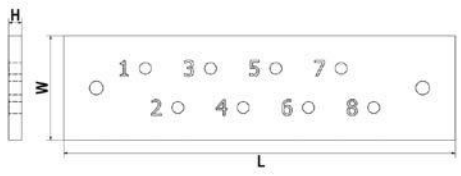

Product documents

STK code	Product code	Product name	L (mm)	W (mm)	H (mm)	Weight (g)	Package (pcs)
19 123 79	AE06-1711	Grounding busbar 10x100x1600, 60 holes 11 mm	1600	100	10	13800	Acc. to order
19 123 39	AE06-1680	Grounding busbar 10x100x1200, 44 holes 11 mm	1200	100	10	10420	Acc. to order
19 123 40	AE06-1681	Grounding busbar 10x100x1000, 36 holes 11 mm	1000	100	10	8690	Acc. to order
19 123 78	AE06-1710	Grounding busbar 10x100x750, 25 holes 11 mm	750	100	10	6500	Acc. to order
19 123 41	AE06-1682	Grounding busbar 10x100x600, 20 holes 11 mm	600	100	10	5220	Acc. to order
19 123 77	AE06-1709	Grounding busbar 10x100x450, 13 holes 11 mm	450	100	10	3900	Acc. to order
19 123 42	AE06-1683	Grounding busbar 10x100x300, 8 holes 11 mm	300	100	10	2620	Acc. to order
19 123 43	AE06-1684	Grounding busbar 10x80x1000, 36 holes 9 mm	1000	80	10	6970	Acc. to order
19 123 44	AE06-1685	Grounding busbar 10x80x600, 20 holes 9 mm	600	80	10	4189	Acc. to order
19 123 45	AE06-1686	Grounding busbar 10x80x300, 8 holes 9 mm	300	80	10	2100	Acc. to order
19 123 46	AE06-1687	Grounding busbar 10x50x1000, 18 holes 11 mm	1000	50	10	4300	Acc. to order
19 123 47	AE06-1688	Grounding busbar 10x50x600, 10 holes 11 mm	600	50	10	2580	Acc. to order
19 123 48	AE06-1689	Grounding busbar 10x50x300, 4 holes 11 mm	300	50	10	1300	Acc. to order
19 123 49	AE06-1690	Grounding busbar 10x50x200, 2 holes 11 mm	200	50	10	860	Acc. to order

Tin plated grounding busbars

Tin plated grounding busbars are suitable for special conditions where bare copper busbars cannot be used.



STK code	Product code	Product name	L (mm)	W (mm)	H (mm)	Weight (g)	Package (pcs)
19 143 28	AE06-1934	Tin plated grounding busbar 10x100x1600, 60 holes 11 mm	1600	100	10	13800	Acc. to order
19 143 15	AE06-1935	Tin plated grounding busbar 10x100x1200, 44 holes 11 mm	1200	100	10	10420	Acc. to order
19 143 16	AE06-1931	Tin plated grounding busbar 10x100x1000, 36 holes 11 mm	1000	100	10	8690	Acc. to order
19 143 27	AE06-1936	Tin plated grounding busbar 10x100x750, 25 holes 11 mm	750	100	10	6500	Acc. to order
19 143 17	AE06-1932	Tin plated grounding busbar 10x100x600, 20 holes 11 mm	600	100	10	5220	Acc. to order
19 143 26	AE06-1937	Tin plated grounding busbar 10x100x450, 13 holes 11 mm	450	100	10	3900	Acc. to order
19 143 18	AE06-1938	Tin plated grounding busbar 10x100x300, 8 holes 11 mm	300	100	10	2620	Acc. to order
19 143 19	AE06-1939	Tin plated grounding busbar 10x80x1000, 36 holes 9 mm	1000	80	10	6970	Acc. to order
19 143 20	AE06-1922	Tin plated grounding busbar 10x80x600, 20 holes 9 mm	600	80	10	4189	Acc. to order
19 143 21	AE06-1940	Tin plated grounding busbar 10x80x300, 8 holes 9 mm	300	80	10	2100	Acc. to order
19 143 22	AE06-1941	Tin plated grounding busbar 10x50x1000, 18 holes 11 mm	1000	50	10	4300	Acc. to order
19 143 23	AE06-1942	Tin plated grounding busbar 10x50x600, 10 holes 11 mm	600	50	10	2580	Acc. to order
19 143 24	AE06-1943	Tin plated grounding busbar 10x50x300, 4 holes 11 mm	300	50	10	1300	Acc. to order
19 143 25	AE06-1944	Tin plated grounding busbar 10x50x200, 2 holes 11 mm	200	50	10	860	Acc. to order

Insulator and fastening packages

Insulators are made of halogen free polyester. Fastening pieces are zinc plated steel. Package includes two insulators, four DIN933 M10x20 bolts and four DIN125 M10 flat pressure washers. Fastening package includes 10 pcs of DIN933x30 screws, 20 pcs of DIN125 flat pressure washers and 10 pcs of DIN934 nuts. Accessory sizes of M8 and M10 available.



STK code	Product code	Product name	Weight (g)	Package (pcs)
19 123 54	AE08-0002	Insulator package for grounding busbars	349	Acc. to order
19 123 73	AE09-0003	Fastening package for grounding busbars M8	250	Acc. to order
19 123 74	AE09-0004	Fastening package for grounding busbars M10	463	Acc. to order

IECEx/ATEX sealing plugs



IECEx/ATEX -sealing plugs are used for sealing threaded holes in the explosive environment. Nickel plated brass made sealing plugs are delivered with EPDM seal which ensures the perfect seal in extreme conditions. Sealing plugs are available from M12 to M75 threads.

STK code	Product code	Type	Weight (g)	Package (pcs)
17 106 49	VD07-0014	Nickel plated brass sealing plug M12x1,5 IECEx/ATEX	3	Acc. to order
17 106 50	VD07-0015	Nickel plated brass sealing plug M16x1,5 IECEx/ATEX	4	Acc. to order
17 106 51	VD07-0016	Nickel plated brass sealing plug M20x1,5 IECEx/ATEX	8	Acc. to order
17 106 52	VD07-0017	Nickel plated brass sealing plug M25x1,5 IECEx/ATEX	12	Acc. to order
17 106 53	VD07-0018	Nickel plated brass sealing plug M32x1,5 IECEx/ATEX	18	Acc. to order
17 106 54	VD07-0019	Nickel plated brass sealing plug M40x1,5 IECEx/ATEX	35	Acc. to order
17 106 55	VD07-0020	Nickel plated brass sealing plug M50x1,5 IECEx/ATEX	56	Acc. to order
17 106 57	VD07-0021	Nickel plated brass sealing plug M63x1,5 IECEx/ATEX	100	Acc. to order
17 106 58	VD07-0022	Nickel plated brass sealing plug M75x1,5 IECEx/ATEX	355	Acc. to order

Technical information	
Approvals	CE 0537
	II 2 G Ex eb IIC Gb
	II 2 D Ex tb IIIC Db
Certificate number	VTT 15 ATEX 054X
	IECEx VTT 15.0017X
Material	Nickel plated brass / EPDM
IP-classification	IP66
Temperature range	-40...+80 °C

Product documents

Cable terminal boxes

Product documents

GeneraL/use: Cable terminal boxes consists of two base frames and is dismountable. Terminal's two rubber seals are designed to fit two different cable diameter ranges a) Ø 40-52 mm and b) Ø 48-60 mm. A single terminal can accomodate two cables. The cable terminal boxes are modular in design and are ATEX certified. Accessories for cable terminal boxes: tension clamp, EMC kit, dismountable cover flange and acid-proof screws. The terminals can also be supplied with angled flanges (45°), which are used to change the angle of the incoming cables.

Materials: Die cast aluminium

Certification and applied regulations: EN 60079-0, EN 60079-7, EN 60079-31



Cable terminal C-box

Cable terminal C-box

STK code	Product code	Type	Cable Ø range (mm)	Size of compatible cables (mm²)	Flange	Number of cables	Weight (g)	Package (pcs)
17 106 34	VD03-0001	C/a	40-52	2x(120-185)	C (FL-21)	1-2	3,3	Acc. to order
17 106 31	VD03-0002	C/b	48-60	2x(185-300)	C (FL-21)	1-2	3,3	Acc. to order
17 106 37	VD03-0006	EMC kit for cable terminal boxes C and D						Acc. to order
17 106 59	VD03-0015	Protection plate for terminal boxes C and D						Acc. to order

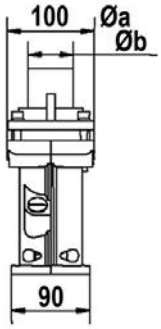

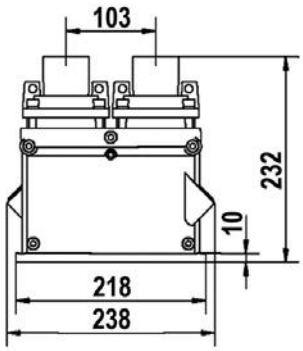

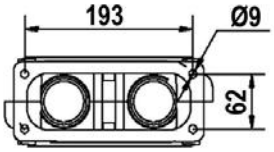



Cable terminal D-box

Cable terminal D-box

STK code	Product code	Type	Cable Ø range (mm)	Size of compatible cables (mm²)	Flange	Number of cables	Weight (g)	Package (pcs)
17 106 32	VD03-0003	D/a	40-52	2x(120 - 185)	D (FL-33)	1-2	3,8	Acc. to order
17 106 33	VD03-0004	D/b	48-60	2x(185 - 300)	D (FL-33)	1-2	3,8	Acc. to order
17 106 37	VD03-0006	EMC kit for cable terminal boxes C and D						Acc. to order
17 106 59	VD03-0015	Protection plate for terminal boxes C and D						Acc. to order

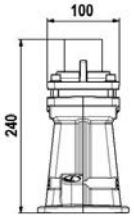

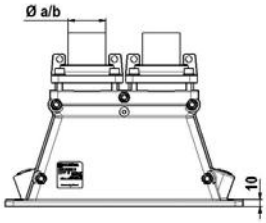

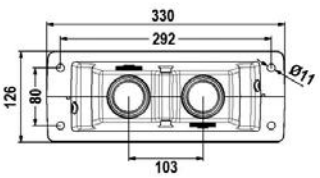

Cable terminal boxes



Cable terminal D2-box

Cable terminal D2-box

STK code	Product code	Type	Cable Ø range (mm)	Size of compatible cables (mm²)	Flange	Number of cables	Weight (g)	Package (pcs)
17 106 35	VD03-0005	D2	57-80	2x(185-300)	D (FL-33)	1-2	7,0	Acc. to order
17 106 38	VD03-0007	EMC kit for cable terminal D2-box						Acc. to order
17 106 60	VD03-0014	Protection plate for terminal D2-box						Acc. to order
17 106 61	OD04-0162	Cable sealing K69 for 10 kV 3x185-300 sector shaped cable						Acc. to order
17 106 62	OD04-0163	Cable sealing K79 for 20 kV 3x150-240 sector shaped cable						Acc. to order

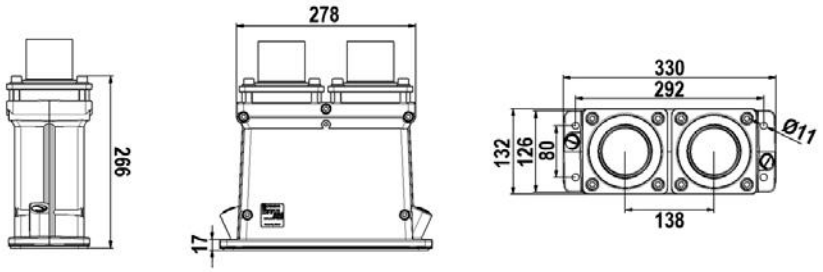

Angle flanges

Alters the angle of incoming cables by 45°. Angle flanges are compatible with Ouneva aluminium flanges and cable terminal boxes.

Product documents



STK code	Product code	Product name	Flange size: input	Flange size: output	L (mm)	H (mm)	Weight (g)	Package (pcs)
34 010 77	VD04-0001	Angle flange C-C	C	C	125	90	1,6	Acc. to order
34 010 78	VD04-0002	Angle flange D-D	D	D	168	128	3,1	Acc. to order
34 010 79	VD04-0003	Angle flange E-D	E	D	168	139	3,3	Acc. to order
34 010 80	VD04-0004	Angle flange E-2D	E	2xD	251	278	6,8	Acc. to order
34 542 25	VD04-0005	Angle flange E-3D	E	3xD	542	400	20,2	Acc. to order

Flange size	D (mm)	d1 (mm)	W (mm)	W1 (mm)	W2 (mm)
C	62	96	224	193	155
D	80	137	342	292	250
2 x D	80	276	330	292	300
3 x D	80	423	330	292	274
E	100	150	410	360	320

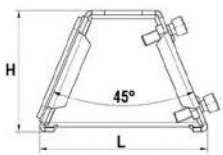

VD04-0004

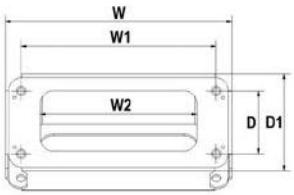

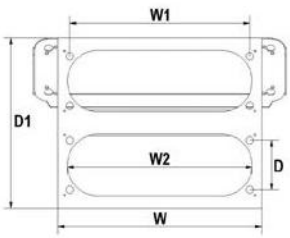

VD04-0001, VD04-0002, VD04-0003

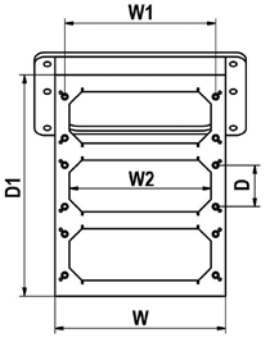

VD04-0005

Flanges for switchgears



General/use: All aluminium flanges have class IP67 protection. Flanges fit into SFS 2528 -sized openings.

Materials: Flanges are made of aluminium and supplied with ATEX approved neoprene gasket.

Product documents

Aluminium flanges with threaded holes

Flanges are compatible with Ouneva sealing plugs, **check out page 53**. Counter nuts are not necessary during the installation of sealing plugs or cable glands.

STK code	Product code	Type / size	Weight (g)	Package (pcs)
34 540 68	VD05-0075	B 1xM40	72	Acc. to order
34 010 86	VD05-0067	B 2xM40	54	Acc. to order
34 010 52	VD05-0043	B 3xM20	74	Acc. to order
34 010 85	VD05-0066	B 3xM32	55	Acc. to order
34 010 53	VD05-0044	B 4xM25	56	Acc. to order
34 540 76	VD05-0045	C 2xM40	252	Acc. to order
34 540 77	VD05-0069	C 2xM50	231	Acc. to order
34 010 66	VD05-0070	C 2xM63	198	Acc. to order
34 540 79	VD05-0046	C 2xM63+2xM20	187	Acc. to order
34 010 63	VD05-0068	C 3xM32	253	Acc. to order
34 010 64	VD05-0028	C 3xM40	233	Acc. to order
34 540 81	VD05-0047	C 3xM50+2xM20	192	Acc. to order
34 010 62	VD05-0048	C 4xM20	266	Acc. to order
34 010 06	VD05-0077	C 4xM32+3xM25	216	Acc. to order
34 010 04	VD05-0029	C 7xM25+2xM20	217	Acc. to order
34 540 82	VD05-0078	D 1xM75	724	Acc. to order
34 010 75	VD05-0051	D 2xM50	733	Acc. to order
34 010 76	VD05-0071	D 2xM63	690	Acc. to order
34 540 86	VD05-0053	D 2xM75	642	Acc. to order
34 540 87	VD05-0054	D 3xM63+2xM25	615	Acc. to order
34 540 89	VD05-0055	D 4xM63+2xM20	563	Acc. to order

Blind aluminium flanges

Blind aluminium flange, no threaded holes or openings.

STK code	Product code	Type / size	Weight (g)	Package (pcs)
34 010 81	VD05-0060	B-flange	90	Acc. to order
34 010 82	VD05-0061	C-flange	288	Acc. to order
34 010 83	VD05-0062	D-flange	806	Acc. to order

B-flange

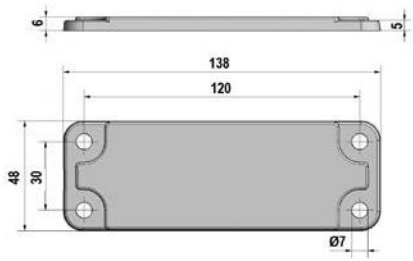

C-flange

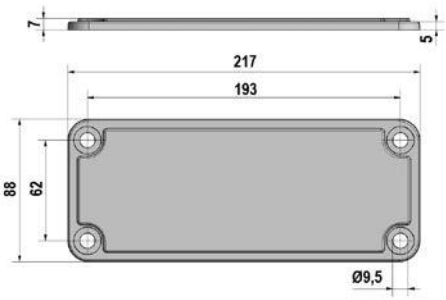

D-flange

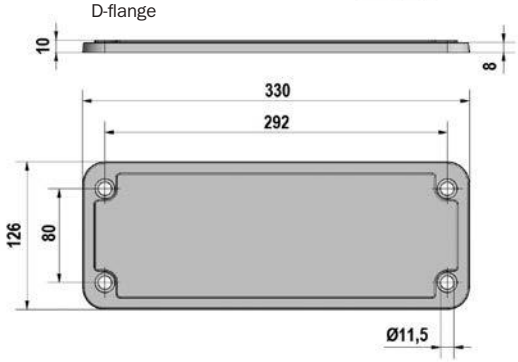

Reduction flanges

STK code	Product code	D1 (mm)	D2 (mm)	H1 (mm)	H2 (mm)	L1 (mm)	L2 (mm)	Weight (g)	Package (pcs)
34 010 87	VD09-0001	15	11	80	100	292	360	1396	Acc. to order
34 010 88	VD09-0002	11,5	9,5	62	80	193	292	854	Acc. to order

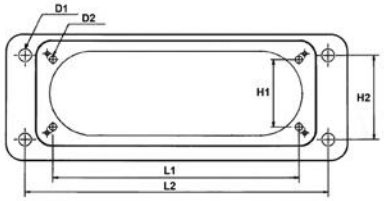

Flanges for switchgears





Plastic flanges

General/use: Blind plastic flanges are used inside switchgears for insulating purposes.

Materials: PPC

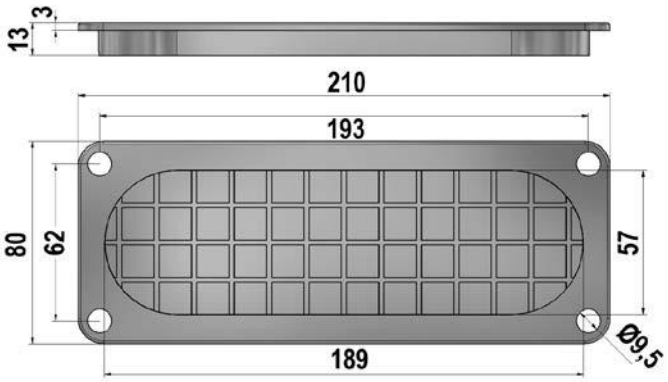

STK code	Product code	Type / size	Color	Diameter of mounting holes (mm)	Weight (g)	Package (pcs)
34 541 53	VD06-0001	C-flange	Grey	6	39	150
34 541 54	VD06-0002	C-flange	Grey	9,5	37	150
34 542 28	VD06-0023	C-flange	Black	9,5	37	150

Product documents





Socket joints

General/use: Socket joints are used for cable entry wirings.

Materials: Polyamide

STK code	Product code	External diameter of the cable (mm)	Total diameter - d1 (mm)	Diameter of the installation hole - d2 (mm)	Thickness of the mounting plate (mm)	Total height - h1 (mm)	h2 (mm)	Weight (g)	Package (pcs)
33 501 76	0D06-0016	8-13	25	20	0,7-2	17	3	1,5	150
33 501 77	0D06-0017	8-15	30	25	0,7-2	17,5	3	2,9	100

Product documents

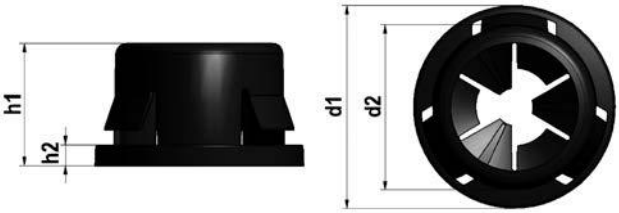

Cover plates



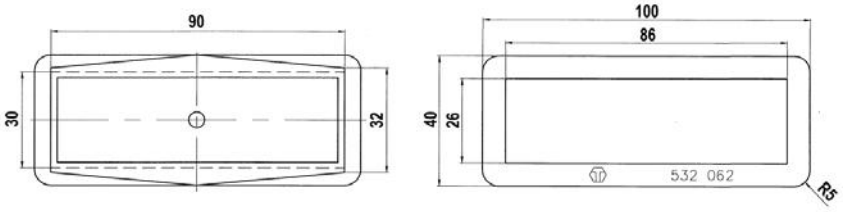

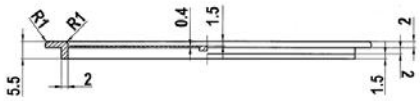

Cover plate for Kwh-meter

Cover plates are made of LDPE. Closed and open models available.

STK code	Product code	Type	Weight (g)	Package (pcs)
34 07 166	0D06-0008	Closed	50	100
34 07 168	0D06-0009	Open	50	100

Product documents



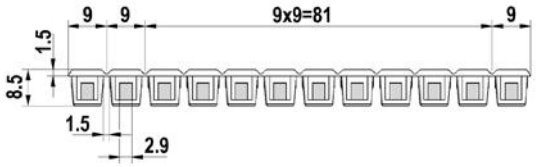

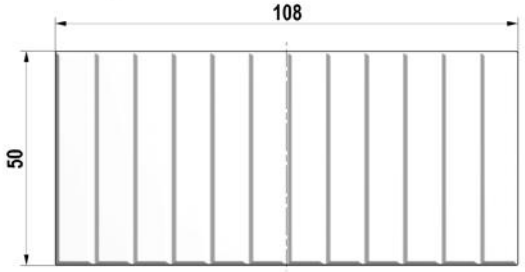

Cover plate for DIN sized openings

Cover plates are made of polycarbonate.

STK code	Product code	Type	Weight (g)	Package (pcs)
33 501 70	0D02-0030	Closed	12	120

Flexible busbars

General/use: Busbars are insulated and designed for distribution boards and electrical installation, which require them to be economic on space and easy to bend. Because of extremely high flexibility and durability of the insulator, the smallest bending radius of the busbar is 3 * total thickness with bending angle of 180°. We also supply flexible busbars with special requirements for installation holes and other dimensions.

Materials:
Insulation is made of PVC.
Busbar is made of pure copper.

Certification and applied regulations:
EN 60439-1

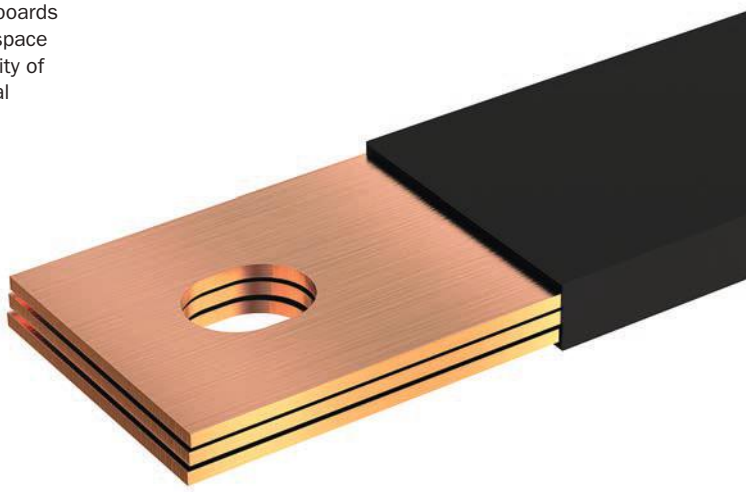

STK code	Product code	Product name	In (A)	Cross-sectional area (mm²)	E (mm)	C (mm)	S (mm)	B (mm)	D/L (mm)	L1 (mm)	Weight (g)	Package (pcs)
34 540 04	VE01-0001	TVK 100A 1x24x400mm Cu	100	24	400	24	1	330	11/14	14	172	Acc. to order
34 540 02	VE01-0008	TVK 100A 1x24x600mm Cu	100	24	600	24	1	530	11/14	14	267	Acc. to order
34 540 00	VE01-0004	TVK 100A 1x24x2000mm Cu	100	24	2000	24	1	1930	11/14	14	933	Acc. to order
34 540 13	VE01-0019	TVK 160A 2x24x400mm Cu	160	48	400	24	2	330	11/14	14	261	Acc. to order
34 540 11	VE01-0021	TVK 160A 2x24x600mm Cu	160	48	600	24	2	530	11/14	14	401	Acc. to order
34 540 09	VE01-0015	TVK 160A 2x24x2000mm Cu	160	48	2000	24	2	1930	11/14	14	1379	Acc. to order
34 540 25	VE01-0042	TVK 250A 3x24x400mm Cu	250	72	400	24	3	330	11/14	14	350	Acc. to order
34 540 23	VE01-0044	TVK 250A 3x24x600mm Cu	250	72	600	24	3	530	11/14	14	534	Acc. to order
34 540 20	VE01-0125	TVK 250A 3x24x1000mm Cu	250	72	1000	24	3	930	11/14	14	903	Acc. to order
34 540 19	VE01-0024	TVK 250A 3x24x2000mm Cu	250	72	2000	24	3	1930	11/14	14	1825	Acc. to order
34 540 37	VE01-0030	TVK 400A 5x32x400mm Cu	400	160	400	32	5	300	13/16	20	682	Acc. to order
34 540 35	VE01-0032	TVK 400A 5x32x600mm Cu	400	160	600	32	5	500	13/16	20	1041	Acc. to order
34 540 32	VE01-0126	TVK 400A 5x32x1000mm Cu	400	160	1000	32	5	900	13/16	20	1759	Acc. to order
34 540 31	VE01-0047	TVK 400A 5x32x2000mm Cu	400	160	2000	32	5	1900	13/16	20	3554	Acc. to order
34 540 45	VE01-0037	TVK 550A 5x40x400mm Cu	550	200	400	40	5	300	13/16	20	846	Acc. to order
34 540 43	VE01-0039	TVK 550A 5x40x600mm Cu	550	200	600	40	5	500	13/16	20	1290	Acc. to order
34 540 41	VE01-0034	TVK 550A 5x40x2000mm Cu	550	200	2000	40	5	1900	13/16	20	4398	Acc. to order
34 540 55	VE01-0053	TVK 630A 6x40x400mm Cu	630	240	400	40	6	300	13/16	20	991	Acc. to order
34 540 53	VE01-0056	TVK 630A 6x40x600mm Cu	630	240	600	40	6	500	13/16	20	1509	Acc. to order
34 540 50	VE01-0061	TVK 630A 6x40x1000mm Cu	630	240	1000	40	6	900	13/16	20	2544	Acc. to order
34 540 49	VE01-0050	TVK 630A 6x40x2000mm Cu	630	240	2000	40	6	1900	13/16	20	5131	Acc. to order
34 540 60	VE01-0122	TVK 800A 10x40x1000mm Cu	800	400	1000	40	10	900	13/16	20	4008	Acc. to order
34 540 59	VE01-0123	TVK 800A 10x40x2000mm Cu	800	400	2000	40	10	1900	13/16	20	8062	Acc. to order
34 540 64	VE01-0085	TVK 1000A 11x50x1000mm Cu	1000	550	1000	50	11	900	13/16	20	5435	Acc. to order

Product documents

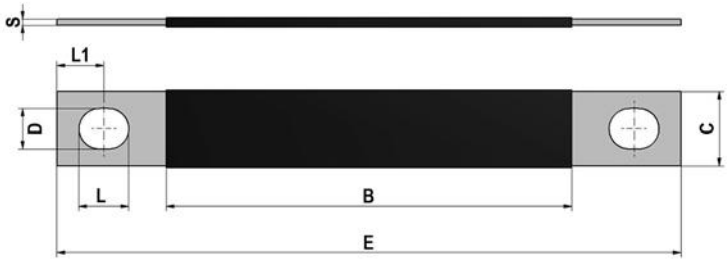

Busbar system connectors



General/use: Connectors are designed for busbar systems to be installed on their side. Material of the busbars can be copper, aluminium or copper coated aluminium. With these connectors it is possible to connect copper cables, flexible busbars and other conductors to busbar systems. Matching support piece is needed if neutral (N) and protective earth busbar (PE) are combined. We also manufacture busbar connectors supplied with screws of custom length.

Materials: Zinc plated steel, tin plated copper

STK code	Product code	Product name	Conductors max (mm²)	Weight (g)	Package (pcs)
19 141 49	VE02-0009	KL2M10	150	141	100
19 141 89	VE02-0003	KL400	70	85	100
19 141 90	VE02-0004	KL800	185	208	50

Product documents

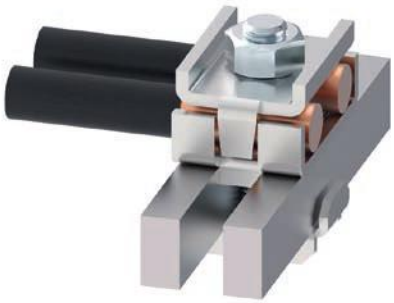

KL2M10 installation

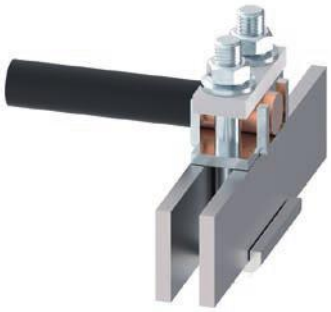

KL400 installation



KL800 installation

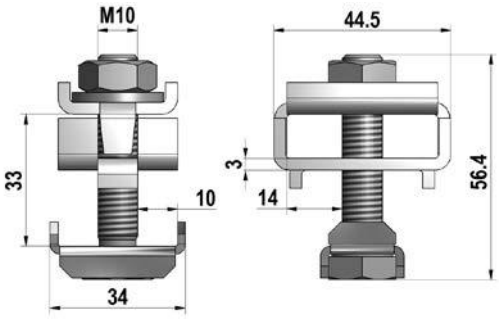

KL2M10

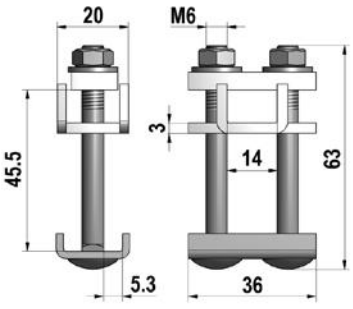

KL400

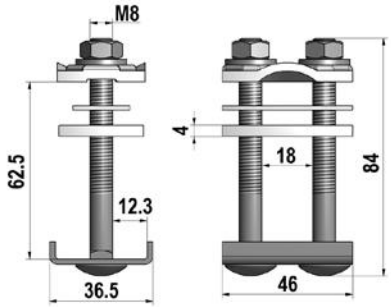

KL800

Accessories

Components are similar to the KL2M10 connector. Gives possibility for client to build connectors for their own requirements.



KL2M10 PP



KL2M10 LL



KL2M10 HP

STK code	Product code	Product name	Type	Material	Weight (g)	Package (pcs)
19 141 86	VE02-0010	KL2M10 PP	Press plate	Zinc plated steel	33	100
19 141 85	VE02-0011	KL2M10 LL	Connector plate	Tin plated copper	42	100
19 141 84	VE02-0012	KL2M10 HP	Hinge plate	Zinc plated steel	15	100

Aluminium connection rails



General/use: Aluminium connection rails are made for connecting different kinds of busbars. Unplated connectors can be used for connecting aluminium busbars. Tin plated busbar connectors are suitable for connecting aluminium and copper busbars.

Materials: Bare aluminium or tin plated aluminium

Product documents

STK code	Product code	Product name	Material	In	Weight (g)	Package (pcs)
19 122 07	VE06-0004	Alipa 30	Aluminium	630 A	28	100
19 122 08	VE06-0005	Alipa 60	Aluminium		56	50
19 122 09	VE06-0006	Alipa 80	Aluminium		75	50
19 122 10	VE06-0007	Alipa 100	Aluminium		94	50
19 122 11	VE06-0008	Alipa 120	Aluminium		111	25
19 122 13	VE06-0009	Alipa 30, tin plated	Tin plated aluminium		28	100
19 122 14	VE06-0010	Alipa 60, tin plated	Tin plated aluminium		56	50
19 122 15	VE06-0011	Alipa 80, tin plated	Tin plated aluminium		75	50
19 122 16	VE06-0012	Alipa 100, tin plated	Tin plated aluminium		94	50
19 122 17	VE06-0013	Alipa 120, tin plated	Tin plated aluminium		111	25

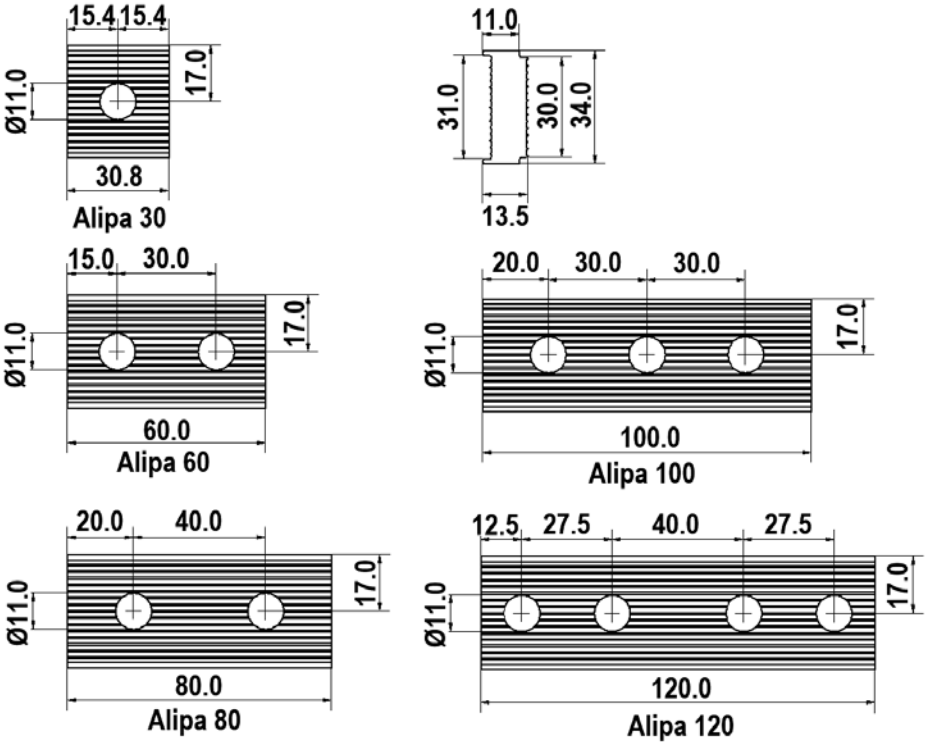

Overhead line accessories (AMKA-series)







Product documents

AMKA-products are designed for 0,4 kV overhead line systems. Nordic climate conditions and easiness of use have been considered in design. Products are tested and approved to meet the IEC regulations.

Parallel groove clamps and busbar clamp

General/use: Parallel groove clamps are used for the connecting and branching of aerial and other aluminium conductors in applications where no mechanical load is existent. All contact surfaces of the clamps are pretreated with contact grease, which makes installation easier. Clamp VF01-0003 is supplied with springs those make installation easier (clamp stays open if not tightened). Clamps can be supplied with insulating covers (**see page 63**). Busbar clamps are used for connecting cables in devices and special conditions. They are suitable for connecting cables in transformer poles.

Materials: Clamps are made of aluminium and the steel bolts are hot-dip galvanized.

Parallel groove clamps

STK code	Product code	Type	Conductor (mm²)	A (mm)	B (mm)	C (mm)	Insulating cover	Tightening torque	AV (mm)	Weight (g)	Package (pcs)
50 403 25	VF01-0001	Al/Al 16-50 mm²	16-50	32	26.5	44	VF03-0001	22 Nm (16-50 mm²)	13	50	200
50 403 27	VF01-0002	Al/Al 16-120 mm²	16-120	44	43	53	VF03-0002	22 Nm (16-120 mm²)	13	125	50
50 403 66	VF01-0003	Al/Al 16-120 mm² with springs	16-120	44	43	53	VF03-0002	22 Nm (16-120 mm²)	13	125	50

Busbar clamp

STK code	Product code	Type	Weight (g)	Package (pcs)
50 403 54	VF06-0005	AMKA-busbar clamp Al/Al 16-120 mm²	169	50

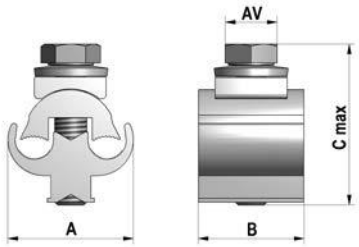

VF01-0001

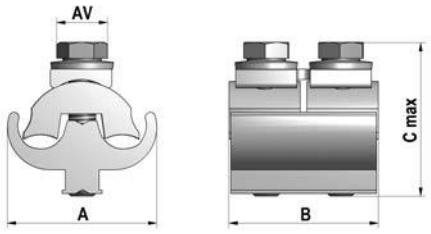

VF01-0002/VF01-0003

Transformer pole busbar

General/use: Transformer pole busbar is intended for connection of aluminum or copper conductors to, for example, the low or high voltage terminals of transformers and surge protectors.

Materials: Tin plated copper

STK code	Product code	Type	Weight (g)	Package (pcs)
50 403 52	VF06-0002	Pole busbar 93	144	50
50 403 50	VF06-0006	Pole busbar 48	96	50



Product documents

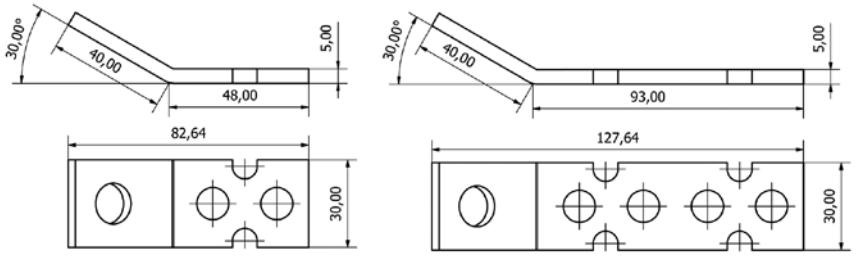

Overhead line accessories (AMKA-series)

Insulating covers for parallel groove clamps

General/use: Insulating covers are used to protect and insulate parallel groove clamps against corrosion and moisture.

Materials: Covers are made of black, UV-radiation resistant plastic.

Product documents



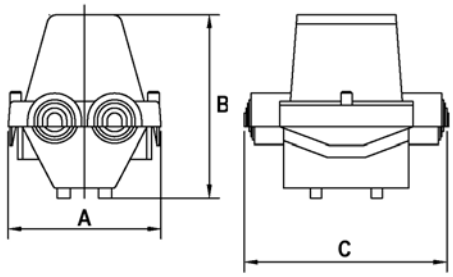

STK code	Product code	Type	A (mm)	B (mm)	C (mm)	Weight (g)	Package (pcs)
50 403 40	VF03-0001	Insulating cover 16-50mm²	45	55	61	12	200
50 403 41	VF03-0002	Insulating cover 16-120mm²	56	67	90	26	100

Suspension clamp

General/use: Suspension clamp is used for suspension of wires in overhead lines for straigt line sections and angles up to 90°.

Materials: The clamp is made of aluminium and steel parts are hot-dip galvanized. Clamp has a plastic cover part at the bottom that prevents wires to get damaged.

Product documents



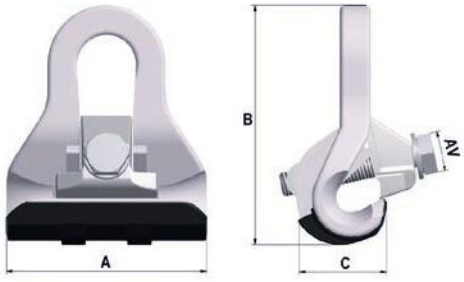

STK code	Product code	Type	A (mm)	B (mm)	C (mm)	AV (mm)	Tightening torque	Weight (g)	Package (pcs)
50 403 45	VF04-0001	Suspension clamp 25-95 mm²	85	110	40	17	50 Nm (25-95 mm²)	255	50

Dead-end clamp

General/use: Dead-end clamp is used for ending overhead lines to poles or walls.

Materials: The clamp is made of aluminium and steel parts are hot-dip galvanized.

Product documents



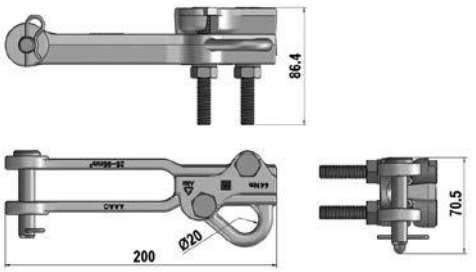

STK code	Product code	Type	Tightening torque	Weight (g)	Package (pcs)
50 403 47	VF05-0002	Dead-end clamp 25-95 mm²	44 Nm (25-95 mm²)	528	25

Branching cabinets





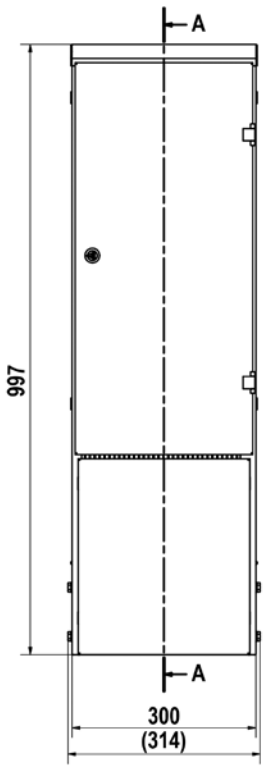

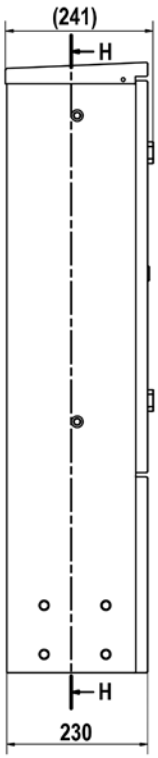

General/use: Branching cabinet includes adjustable chassis, hinged door with K10 -type lock, grounding cable and connectors. Cabinet is made of zinc plated steel and painted with RAL 7037 or RAL 7008 powder paint.

Certification and applied regulations:
EN 61439-1/61439-5

STK code	Product code	Product name	Package (pcs)
54 080 08	AJ02-0595	Branching cabinet RAL7037	Acc. to order
54 080 07	AJ02-0594	Branching cabinet RAL7008	Acc. to order
54 080 01	AJ02-0507	Branching cabinet RAL7037 OTL95	Acc. to order
54 080 02	AJ02-0521	Branching cabinet RAL7008 OTL95	Acc. to order
54 080 05	AJ02-0535	Branching cabinet RAL7037 OTL150	Acc. to order
54 080 03	AJ02-0536	Branching cabinet RAL7008 OTL150	Acc. to order
54 080 06	AJ02-0538	Branching cabinet RAL7037 OTL240	Acc. to order
54 080 04	AJ02-0539	Branching cabinet RAL7008 OTL240	Acc. to order

Product documents

AJ02-0594



AJ02-0521

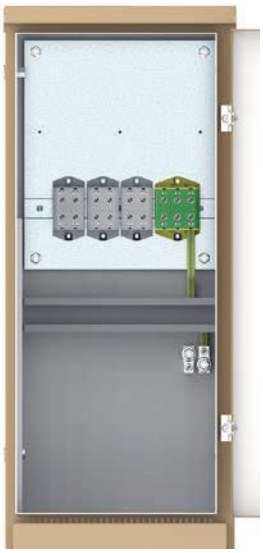

AJ02-0536

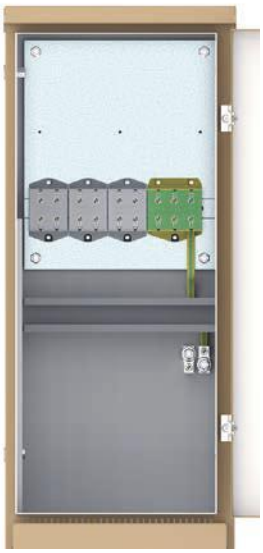

AJ02-0539

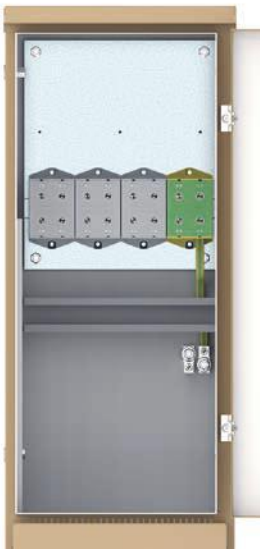

Marking devices

General/use: Marking devices are suitable for different kinds of marking purposes in nature as well as in urban environment. The devices can be used for marking underground cables, pipes and sewers. Also the electric switching gears and pump stations can be easily marked with the devices.

Materials: Marking device body is made of flexible fiber glass and the reflector of 3M Scotchlite reflective tape. Yellow plastic head is made of PeHD thermoplastic polymer which has an excellent UV durability.



Switchgear marking devices

STK code	Product code	Product name	Weight (g)	Package (pcs)
64 360 12	VK07-0006	Switchgear marking device 1200	337	100
64 360 13	VK07-0007	Switchgear marking device 1600	371	100
64 360 24	VK07-0008	Switchgear marking device 2000	406	100

Product documents

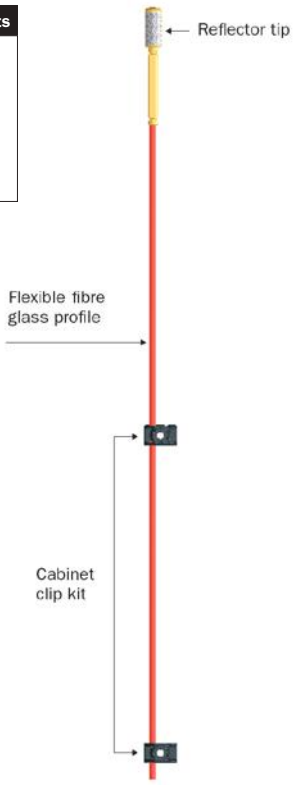

Included accessories:
– Plastic fastening pieces
– Screws for M8/M10 fixation

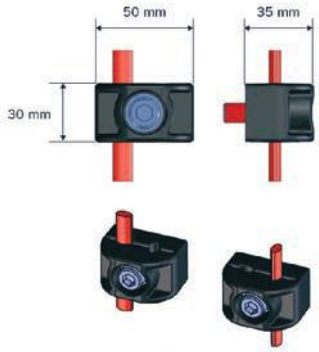

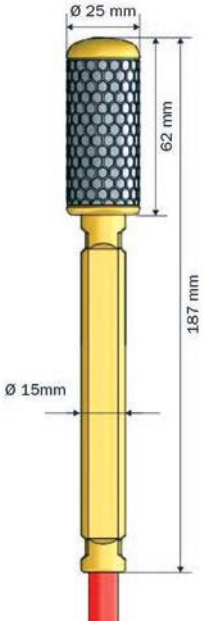

Marking devices

No more digging! Cable marking devices can be installed easily without any tools. Die cast aluminium head makes the installation easy in challenging grounds and high quality glass fiber shaft will last in rough weather conditions. Marking plate is visible in long distance thanks to the powerful reflector. Marking plate can be customized, ask more from Ouneva sales.



Cable marking devices

STK code	Product code	Product name	Marking plate color	Weight (g)	Package (pcs)
64 360 29	VK07-0026	Cable marking device 1600 mm with die cast anchor	Red	648	10/100
65 360 30	VK07-0027	Cable marking device 2000 mm with die cast anchor	Red	750	10/100
66 360 31	VK07-0028	Cable marking device 1600 mm with die cast anchor	Yellow	648	10/100
67 360 32	VK07-0029	Cable marking device 2000 mm with die cast anchor	Yellow	750	10/100

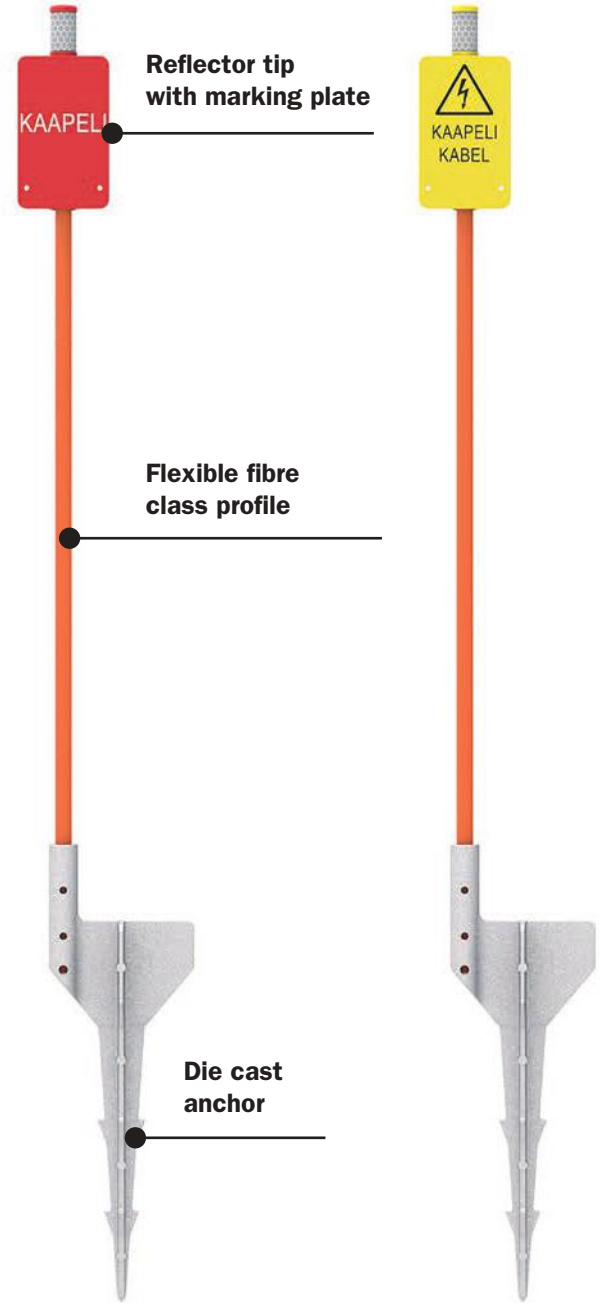



Included accessories:
– Plastic marking plate
– Die cast aluminium anchor

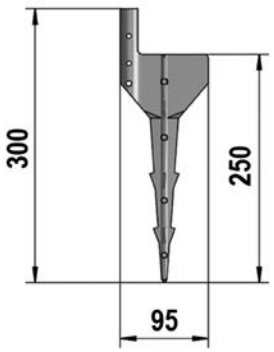

Enclosure latches

Compression latch PG 13,5 Zn

Compression latch PG 13,5 is equipped with 5 mm closing range. Bodies of latches are made of zinc and plated with nickel. Cam is made of zinc coated steel. Sealing is ensured with O-ring.



Product documents

STK code	Product code	Closing range (mm)	Key insert	Weight (g)	Package (pcs)
34 541 16	VH01-0026	20-25	3	55	100
34 541 17	VH01-0027	25-30	3	55	100
34 541 18	VH01-0028	30-35	3	55	100
34 541 19	VH01-0029	35-40	3	60	100
34 541 20	VH01-0030	20-25	4	55	100
34 541 21	VH01-0031	25-30	4	55	100
34 541 22	VH01-0032	30-35	4	55	100
34 541 23	VH01-0033	35-40	4	60	100
34 541 24	VH01-0034	20-25	1	55	100
34 541 25	VH01-0035	25-30	1	55	100
34 541 26	VH01-0036	30-35	1	55	100
34 541 27	VH01-0037	35-40	1	60	100
34 541 28	VH01-0038	20-25	2	55	100
34 541 29	VH01-0039	25-30	2	55	100
34 541 30	VH01-0040	30-35	2	55	100
34 541 31	VH01-0041	35-40	2	60	100
34 541 32	VH01-0042	20-25	5	55	100
34 541 33	VH01-0043	25-30	5	55	100
34 541 34	VH01-0044	30-35	5	55	100
34 541 35	VH01-0045	35-40	5	60	100
34 541 49	VH01-0051	20-25	6	55	100
34 541 50	VH01-0052	25-30	6	55	100
34 541 51	VH01-0053	30-35	6	55	100
34 541 52	VH01-0054	35-40	6	60	100

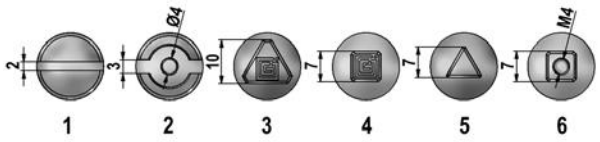

Turn cam latch PG 13,5 Zn

Turn cam latch latch PG 13,5 is available with several key inserts and closing ranges. Bodies of latches are made of zinc and plated with nickel. Cam is made of zinc coated steel. Sealing is ensured with O-ring.



Product documents

STK code	Product code	Closing range (mm)	Key insert	Weight (g)	Package (pcs)
34 540 91	VH01-0001	20	3	55	100
34 540 92	VH01-0002	22	3	55	100
34 540 93	VH01-0003	25	3	55	100
34 540 94	VH01-0004	27	3	55	100
34 540 95	VH01-0005	30	3	60	100
34 540 96	VH01-0006	20	4	55	100
34 540 97	VH01-0007	22	4	55	100
34 540 98	VH01-0008	25	4	55	100
34 540 99	VH01-0009	27	4	55	100
34 541 00	VH01-0010	30	4	60	100
34 541 01	VH01-0011	20	1	55	100
34 541 02	VH01-0012	22	1	55	100
34 541 03	VH01-0013	25	1	55	100
34 541 04	VH01-0014	27	1	55	100
34 541 05	VH01-0015	30	1	60	100
34 541 06	VH01-0016	20	2	55	100
34 541 07	VH01-0017	22	2	55	100
34 541 08	VH01-0018	25	2	55	100
34 541 09	VH01-0019	27	2	55	100
34 541 10	VH01-0020	30	2	60	100
34 541 11	VH01-0021	20	5	55	100
34 541 12	VH01-0022	22	5	55	100
34 541 13	VH01-0023	25	5	55	100
34 541 14	VH01-0024	27	5	55	100
34 541 15	VH01-0025	30	5	60	100
34 541 44	VH01-0046	20	6	55	100
34 541 45	VH01-0047	22	6	55	100
34 541 46	VH01-0048	25	6	55	100
34 541 47	VH01-0049	27	6	55	100
34 541 48	VH01-0050	30	6	60	100

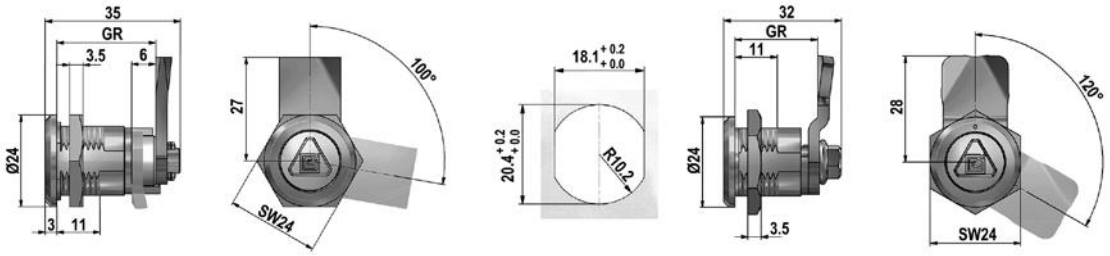

Latch keys

Latch keys are available with four different key inserts.
Keys are made of nickel coated zinc.

STK code	Product code	Product name	Key insert	Weight (g)	Package (pcs)
34 541 36	VH04-0009	Latch key KL Zn	1	30	100
34 541 39	VH04-0010	Latch key K10 Zn	2	30	100
34 541 38	VH04-0012	Latch key N7 Zn	3	30	100
34 541 37	VH04-0011	Latch key K7 Zn	4	30	100

Product documents

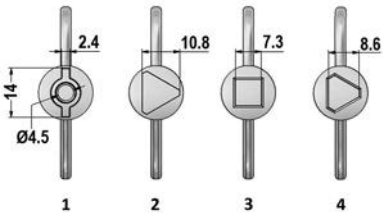



Enclosure hinge

Die-cast enclosure hinge, made of zinc and coated with nickel. Hinge has high mechanical strength and is easy to install. Allows the opening angle of 180 degrees for door.

STK code	Product code	Product name	Weight (g)	Package (pcs)
34 541 43	VH03-0001	Enclosure hinge Zn	45	100



Product documents

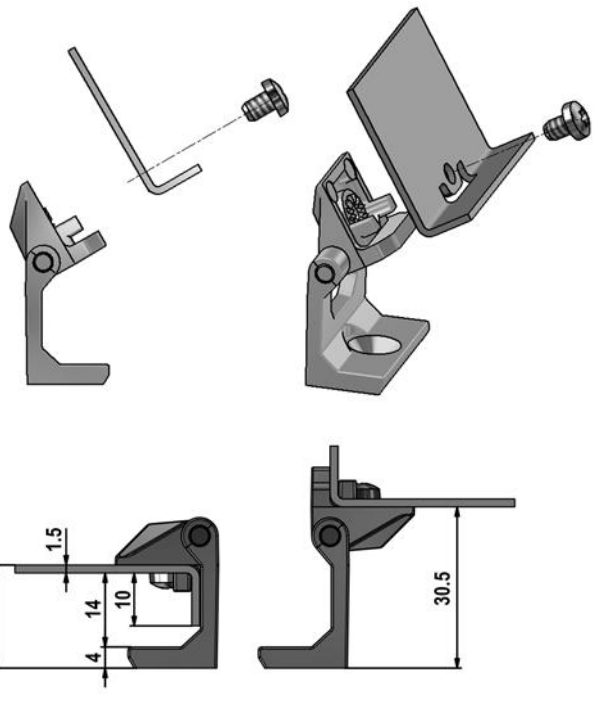

Hinge enables opening angle for door of 180 degrees.

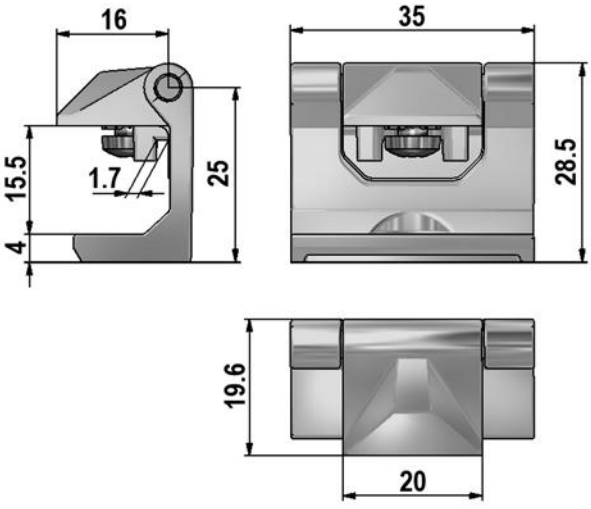

Quality and environment certificates



SGS

Certificate FI12/0007

The management system of

Ouneva Oy

Teollisuustie 21
FI-82730 Tuupovaara
Finland

has been assessed and certified as meeting the requirements of

ISO 9001:2015

For the following activities

Design, product development, production and marketing of connectors, current carrying paths, sheet metal products and enclosure equipment

This certificate is valid from 7th of June 2021
until 6th of June 2024
Issue 8. Certified since March 1996

Certified activities performed by additional sites listed on subsequent pages.

FINAS
Finnish Accreditation Service
S009 (EN ISO/IEC 17021-1)

Authorised by

Harri Kaartinen
Manager

SGS Finnlo Ltd
Takomotie 8, FI-00380 Helsinki, Finland
t +358 (0)9 6963 61 - f +358 (0)9 692 5474 www.sgs.fi

Page 1 of 2



SGS

Certificate FI12/1016

The management system of

Ouneva Oy

Teollisuustie 21
FI-82730 Tuupovaara
Finland

has been assessed and certified as meeting the requirements of

ISO 14001:2015

For the following activities

Design, product development, production and marketing of connectors, current carrying paths, sheet metal products and enclosure equipment

This certificate is valid from 7th of June 2021
until 6th of June 2024
Issue 9. Certified since June 2001

Certified activities performed by additional sites listed on subsequent pages.

FINAS
Finnish Accreditation Service
S009 (EN ISO/IEC 17021-1)

Authorised by

Harri Kaartinen
Manager

SGS Finnlo Ltd
Takomotie 8, FI-00380 Helsinki, Finland
t +358 (0)9 6963 61 - f +358 (0)9 692 5474 www.sgs.fi

Page 1 of 2



SGS

Certificate FI20/871782

The management system of

Ouneva Oy

Teollisuustie 21
FI-82730 Tuupovaara
Finland

has been assessed and certified as meeting the requirements of

ISO 45001:2018

For the following activities

Design, product development, production and marketing of connectors, current carrying paths, sheet metal products and enclosure equipment

This certificate is valid from 7th of June 2021
until 6th of June 2024
Issue 2. Certified since May 2020

Certified activities performed by additional sites listed on subsequent pages.

FINAS
Finnish Accreditation Service
S009 (EN ISO/IEC 17021-1)

Authorised by

Harri Kaartinen
Manager

SGS Finnlo Ltd
Takomotie 8, FI-00380 Helsinki, Finland
t +358 (0)9 6963 61 - f +358 (0)9 692 5474 www.sgs.fi

Page 1 of 2

Samples of product certificates



SERTIFIKAATTI FI 30578

Viitteemme 294233-1

Tuote	Voimakaapelin liitin
Tyyppi	VC05-0XXX
Kauppanimi	Ouneva
Sertifikaatin haltija/ Valmistaja	Ouneva Oy Teollisuustie 21 FI-82730 TUUPOVAARA, FINLAND
Tekniset tiedot	See the Appendix to this certificate
Tuote täyttää standardin/ standardit	EN 61238-1:2003 EN 60947-7-1:2009 EN 60947-7-2:2009
Voimassaolo	Tämä sertifikaatti on voimassa 2023-09-20 asti edellyttäen, että FI-sertifioinnin ehdot on täytetty. Tähän sertifikaattiin liittyy FI-merkin käyttöoikeus sillä edellytyksellä, että mahdolliset muutokset tuotteeseen on hyväksytty SGS Fimkossa ennen tuotteen markkinoille saattamista.
Direktiivi-informaatio	Sertifioitu tuote täyttää yllä mainitun standardin vaatimukset, joka on Pienjännitedirektiivin (2014/35/EU) mukainen yhdenmukaistettu standardi tämän sertifikaatin myöntämishetkellä.
Myöntämispäivämäärä	2018-09-20 SGS Fimko Oy
Allekirjoitus	Seppo Lautamies Project Manager

Tähän sertifikaattiin sisältyy 4 lisäsivua

SGS Fimko Oy | Stenkrumentie 3 PL 30 FI-00211 Helsinki, Finland
Business ID 0978538-8 | Member of the SGS Group (SGS SA)

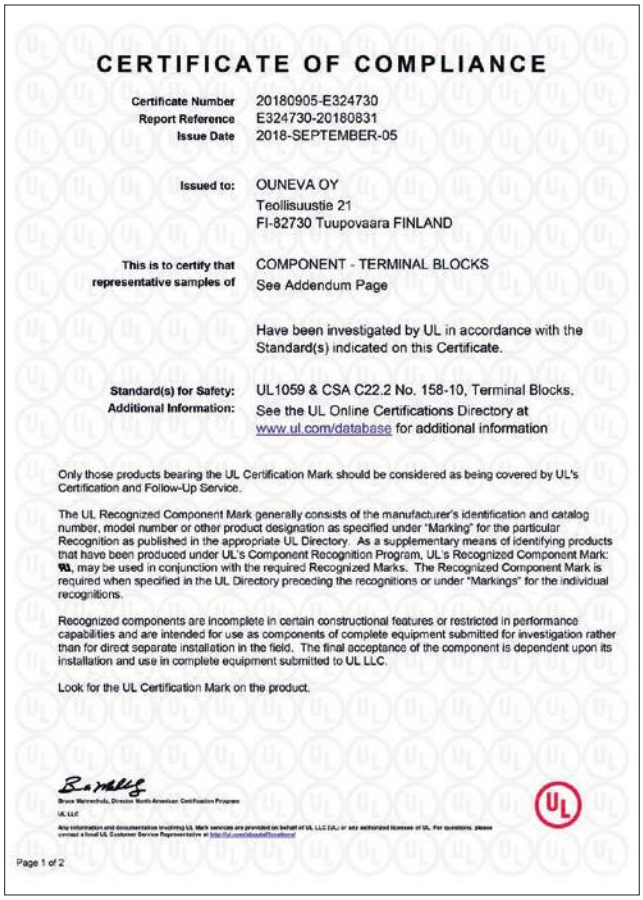

CERTIFICATE OF COMPLIANCE

Certificate Number	20180905-E324730
Report Reference	E324730-20180831
Issue Date	2018-SEPTEMBER-05
Issued to:	OUNEVA OY Teollisuustie 21 FI-82730 Tuupovaara FINLAND
This is to certify that representative samples of	COMPONENT - TERMINAL BLOCKS See Addendum Page
	Have been investigated by UL in accordance with the Standard(s) indicated on this Certificate.
Standard(s) for Safety:	UL1059 & CSA C22.2 No. 158-10, Terminal Blocks.
Additional Information:	See the UL Online Certifications Directory at www.ul.com/database for additional information

Only those products bearing the UL Certification Mark should be considered as being covered by UL's Certification and Follow-Up Service.

The UL Recognized Component Mark generally consists of the manufacturer's identification and catalog number, model number or other product designation as specified under "Marking" for the particular Recognition as published in the appropriate UL Directory. As a supplementary means of identifying products that have been produced under UL's Component Recognition Program, UL's Recognized Component Mark: ᴿᴬ, may be used in conjunction with the required Recognized Marks. The Recognized Component Mark is required when specified in the UL Directory preceding the recognitions or under "Markings" for the individual recognitions.

Recognized components are incomplete in certain constructional features or restricted in performance capabilities and are intended for use as components of complete equipment submitted for investigation rather than for direct separate installation in the field. The final acceptance of the component is dependent upon its installation and use in complete equipment submitted to UL LLC.

Look for the UL Certification Mark on the product.

Page 1 of 2

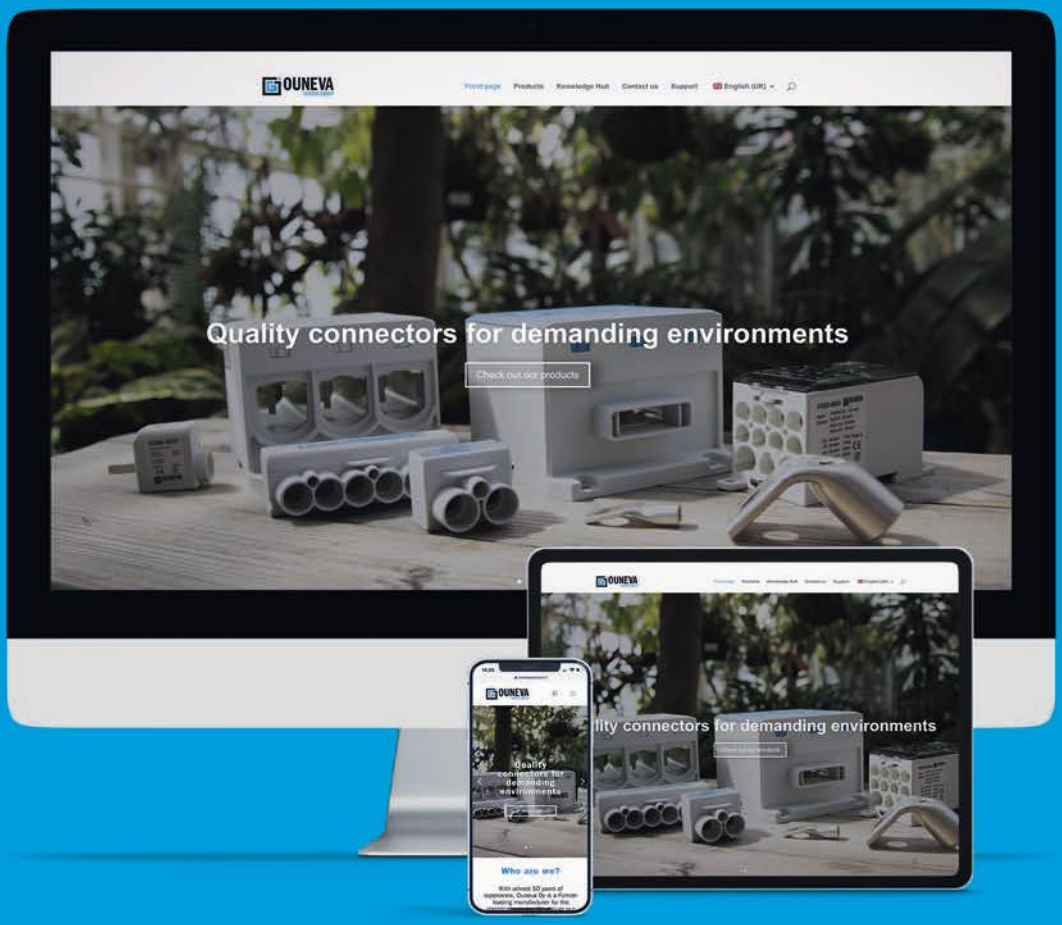

Get familiar with Ouneva products online: www.ounevaproducts.fi

You can find the latest documents and product information from our new website.

Please tell us if you didn't find suitable connector for your appliance:



OUNEVA
OUNEVA GROUP

Teollisuustie 21 · 82730 Tuupovaara · Finland
Tel. +358 400 179 750
ounevagroup.fi • **ounevaproducts.fi**

Product catalog printed 1/2023